FLORIDA ONSITE SEWAGE NITROGEN REDUCTION STRATEGIES STUDY 50% DESIGN DOCUMENTS

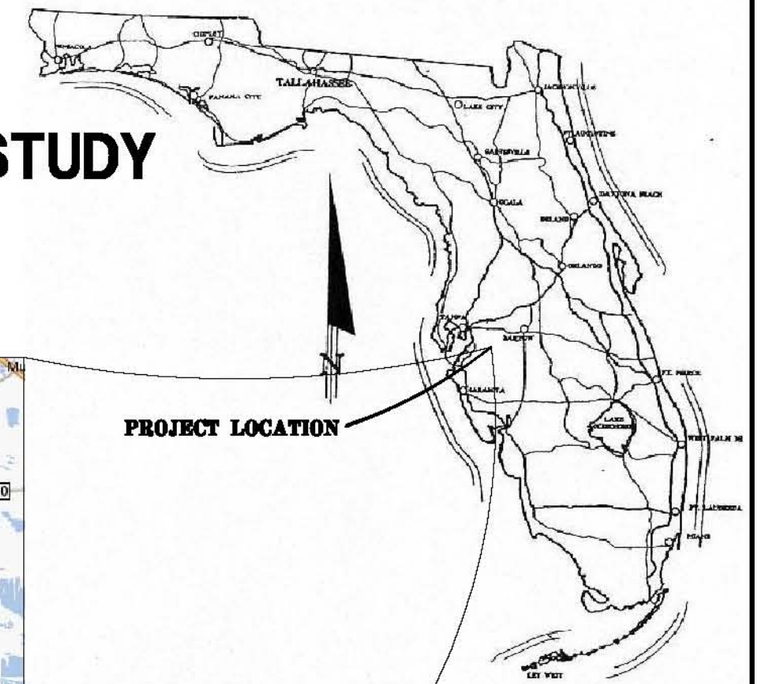

LIST OF DRAWINGS

SHEET COUNT	SHEET NUMBER	SHEET TITLE
		GENERAL
1	G-1	COVER SHEET AND INDEX OF DRAWINGS
		CIVIL
2	C-1	EXISTING ONSITE SEPTIC TANK SYSTEM
3	C-2	PROPOSED OVERALL SITE PLAN
4	C-3	PNRS II DETAILS
5	C-4	PNRS II DETAILS
6	C-5	TASK C NITROGEN FATE OF TRANSPORT STUDY DETAILS
7	C-6	WASTEWATER SOURCE COMPONENTS DETAILS
8	C-7	MONITORING PLAN
		MECHANICAL
9	M-1	YARD PIPING PLAN
		ELECTRICAL
10	E-1	ELECTRICAL SITE PLAN

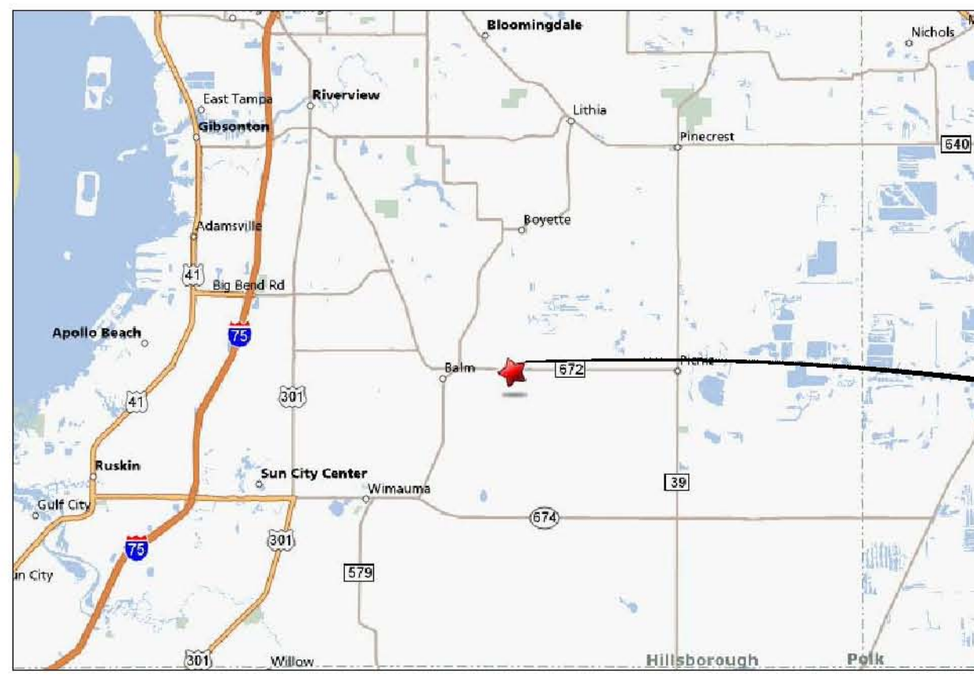

LOCATION MAP

N.T.S.

HAZEN AND SAWYER
Environmental Engineers & Scientists

10002 Princess Palm Ave., Suite 200
Tampa, Florida 33619
Certificate of Authorization Number: 2771

FLORIDA DEPARTMENT OF HEALTH
4052 BALD CYPRESS WAY, BIN A08
TALLAHASSEE, FLORIDA 32399-1713
(850)-245-4070

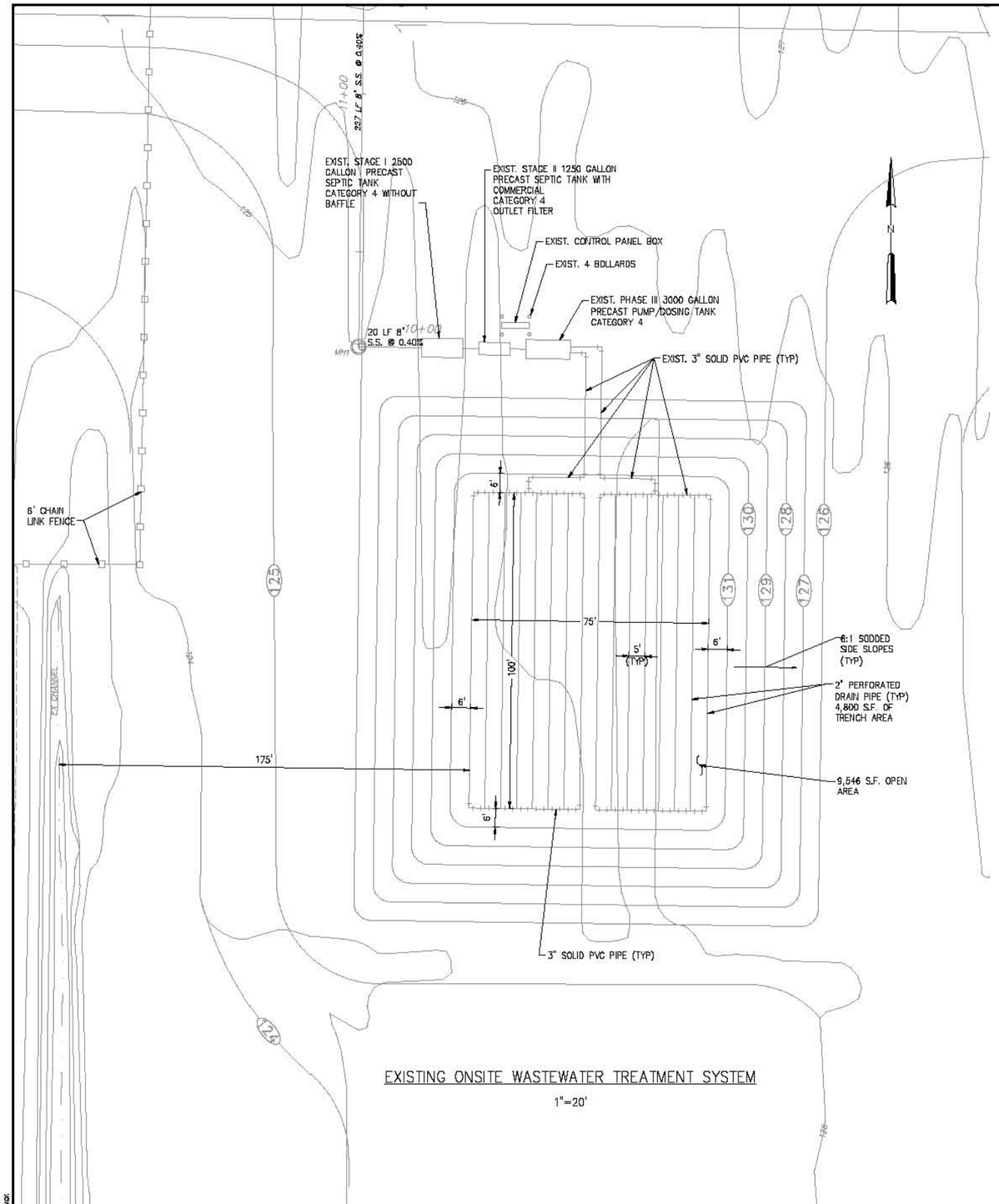

EXISTING ONSITE WASTEWATER TREATMENT SYSTEM

1"=20'

EXISTING DRAIN FIELD CALCULATION

BASED ON UNSUITABLE SUBSURFACE CONDITIONS

LOAD RATE = 0.65
TRENCH AREA = 2828 GPD/0.65 = 4351 SF
OPEN AREA = 2 x 4351 SF = 8702 SF

EXISTING SYSTEM FLOW CALCULATION

DESIGN FLOW (PER 64E-6.008(1b) TABLE 1)

ADMIN/STAFF (10Dx15)	= 1500 GPD
SCHOOL [STUDENT BOARDING TYPE] (16 x 75 GPD)	= 1200 GPD
ADD FOR SHOWERS (16 x 4)	= 64 GPD
ADD FOR CAFETERIA (16 x 4)	= 64 GPD
TOTAL	= 2828 GPD

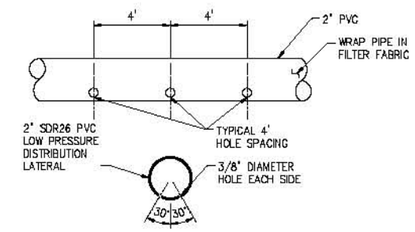

EXISTING HOLE SPACING DETAIL

N.T.S.

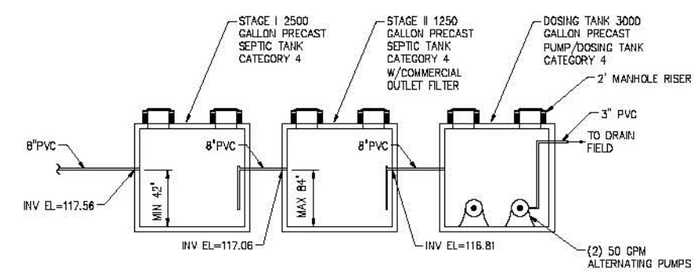

EXISTING SEPTIC TANK CROSS-SECTION

N.T.S.

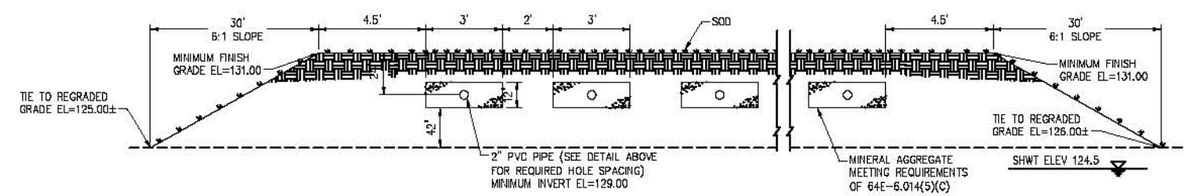

TYPICAL SECTION THRU EXISTING DRAIN FIELD

N.T.S.

1"=20'-0' 20 10 0 20'

NO.	ISSUED FOR	DATE	BY	APPROVED

DESIGNED —
DRAWN —
CHECKED —
PROJ. ENGR. —
—.

Name: Date:
Florida Professional Engineer's Registration Number: —

HAZEN AND SAWYER
Environmental Engineers & Scientists
10002 Princess Palm Avenue
Registry One Building, Suite 200
Tampa, Florida 33619
Certificate of Authorization Number: 2771

FLORIDA DEPARTMENT OF HEALTH
4052 BALD CYPRESS WAY, BIN A08
TALLAHASSEE, FL 32399-1713
(850)-245-4070

FLORIDA DEPARTMENT OF HEALTH

FLORIDA DEPARTMENT OF HEALTH
FLORIDA ONSITE SEWAGE NITROGEN REDUCTION STRATIGIES STUDY

EXISTING ONSITE WASTEWATER TREATMENT SYSTEM

THE SCALE BAR SHOWN BELOW MEASURES ONE INCH LONG ON THE ORIGINAL DRAWING.

DATE AUGUST 2009
H & S JOB NUMBER 44237-001
CONTRACT NUMBER
DRAWING NUMBER C-1

PLOT DATE: 9/4/2009 2:47 PM BY: JEDEWAX
File = Q:\44237-001-TPA\44237-001\Drawings\1003 Design\Civil\C-1 EXISTING SEPTIC.DWG SYSTEM Saved by jedewax from date = 9/4/2009 2:46 PM

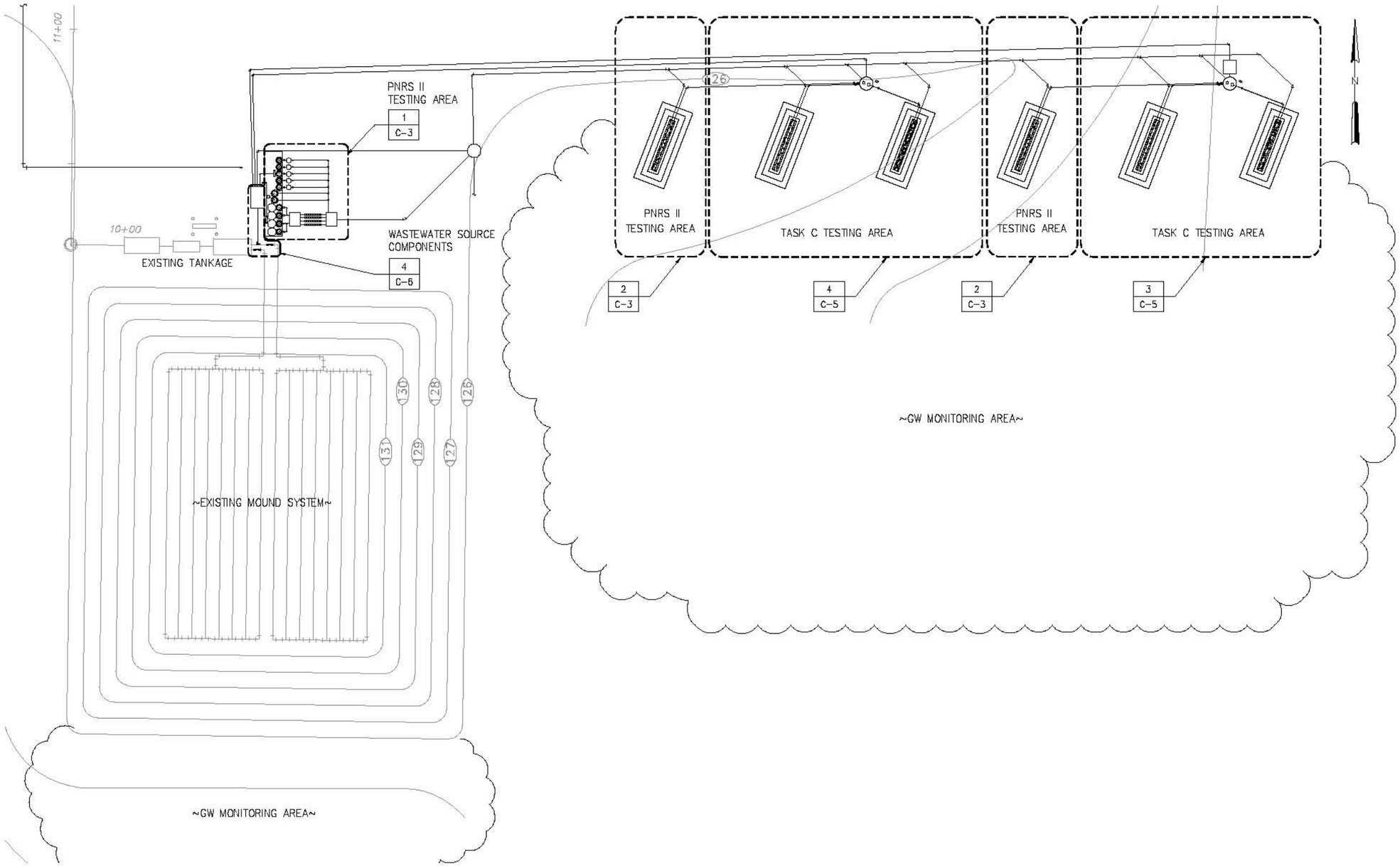

PROPOSED SITE PLAN

1"=20'

NO.	ISSUED FOR	DATE	BY

DESIGNED –
DRAWN –
CHECKED –
PROJ. ENGR. –
APPROVED –

Name: Date:
Florida Professional Engineer's Registration Number: –

HAZEN AND SAWYER
Environmental Engineers & Scientists
10002 Princess Palm Avenue
Registry One Building, Suite 200
Tampa, Florida 33619
Certificate of Authorization Number: 2771

FLORIDA DEPARTMENT OF HEALTH

FLORIDA DEPARTMENT OF HEALTH
4052 BALD CYPRESS WAY, BIN A08
TALLAHASSEE, FL 32399-1713
(850)-245-4070

FLORIDA DEPARTMENT OF HEALTH
FLORIDA ONSITE SEWAGE NITROGEN REDUCTION STRATIGIES STUDY

OVERALL PROPOSED SITE PLAN

THE SCALE BAR SHOWN BELOW MEASURES ONE INCH LONG ON THE ORIGINAL DRAWING.

DATE AUGUST 2009
H & S JOB NUMBER 44237-001
CONTRACT NUMBER
DRAWING NUMBER C-2

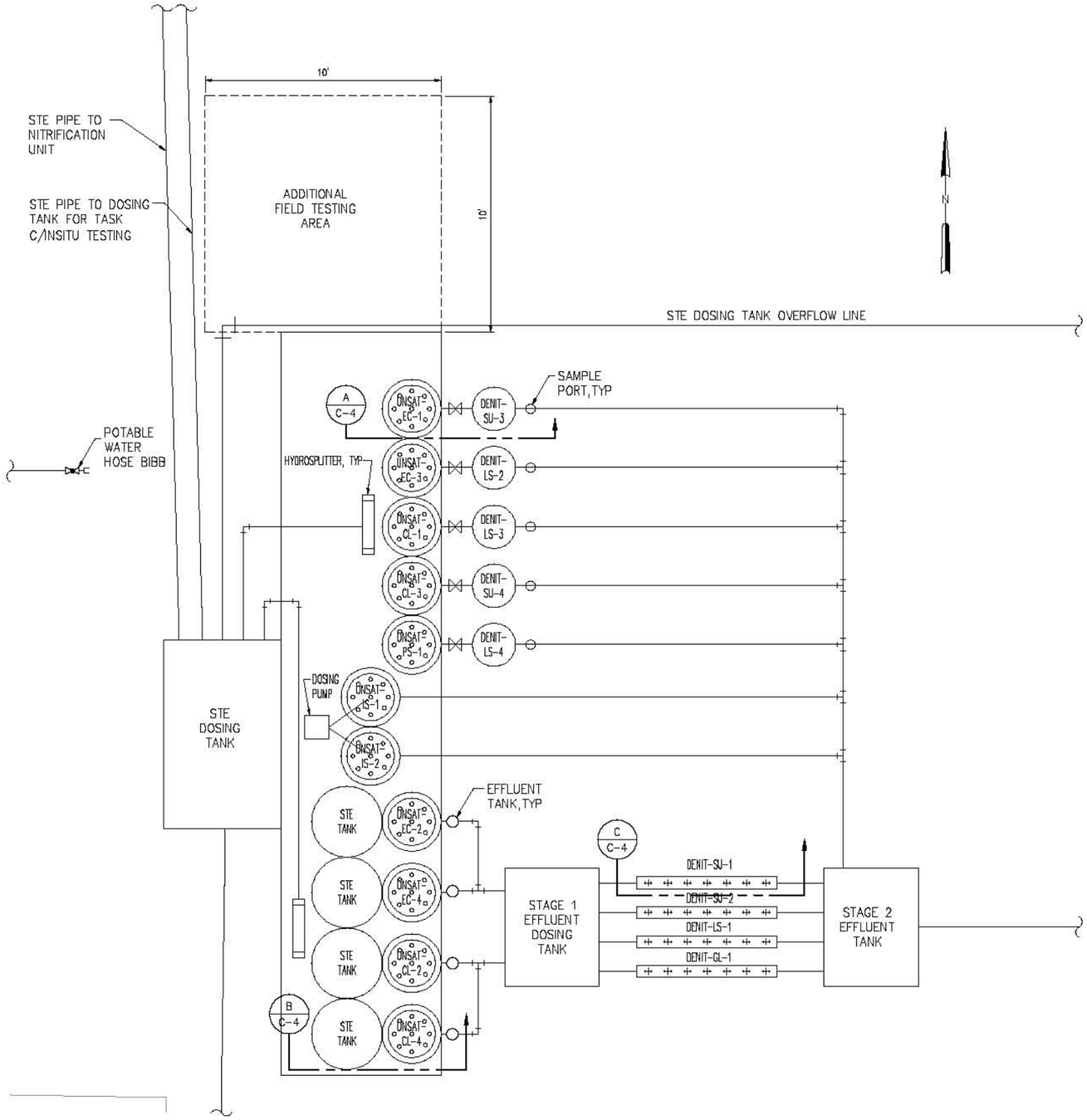

DETAIL 1 C-2
3/8"=1'-0"

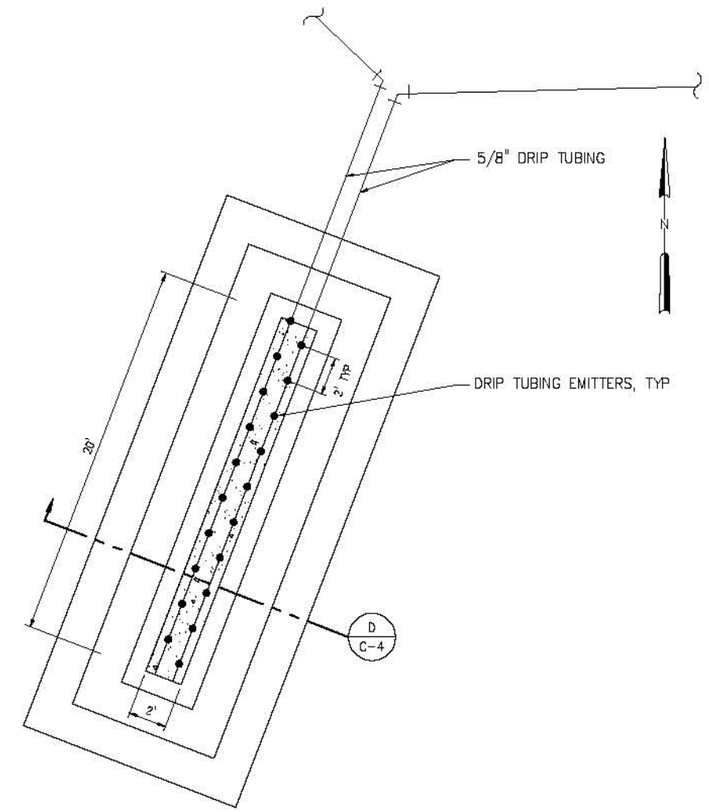

INSITU-1/2

DETAIL 2 C-2
3/8"=1'-0"

3/8"=1'-0"

12" 0 1 2 4'

NO.	ISSUED FOR	DATE	BY

DESIGNED –
DRAWN –
CHECKED –
PROJ. ENGR. –
APPROVED

Name: Date:
Florida Professional Engineer's Registration Number: –

HAZEN AND SAWYER
Environmental Engineers & Scientists
10002 Princess Palm Avenue
Registry One Building, Suite 200
Tampa, Florida 33619
Certificate of Authorization Number: 2771

FLORIDA DEPARTMENT OF HEALTH
4052 BALD CYPRESS WAY, BIN A08
TALLAHASSEE, FL 32399-1713
(850)-245-4070

FLORIDA DEPARTMENT OF HEALTH
FLORIDA ONSITE SEWAGE NITROGEN REDUCTION STRATIGIES STUDY

PNRS II DETAILS

THE SCALE BAR SHOWN BELOW MEASURES ONE INCH LONG ON THE ORIGINAL DRAWING.

DATE AUGUST 2009
H & S JOB NUMBER 44237-001
CONTRACT NUMBER
DRAWING NUMBER C-3

PLOT DATE: 8/4/2009 1:57 PM BY: JEBRACK

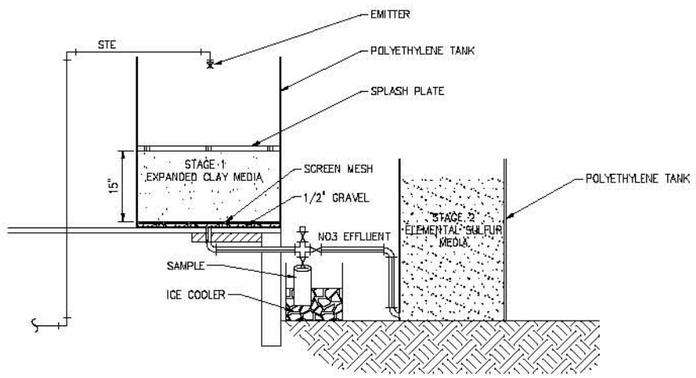

SECTION A / C-3
NTS

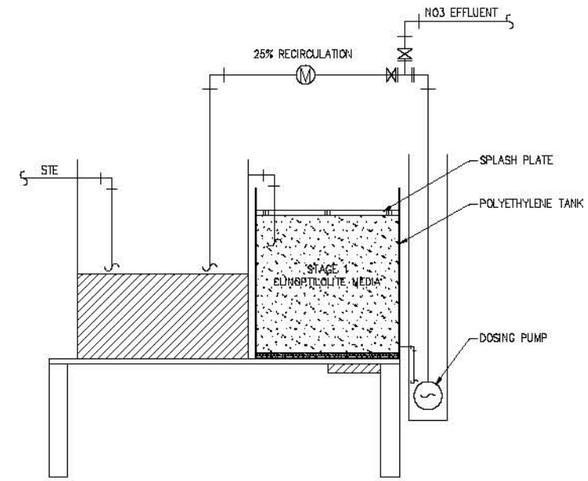

SECTION B / C-3
NTS

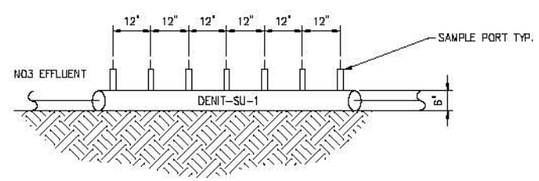

SECTION C / C-3
NTS

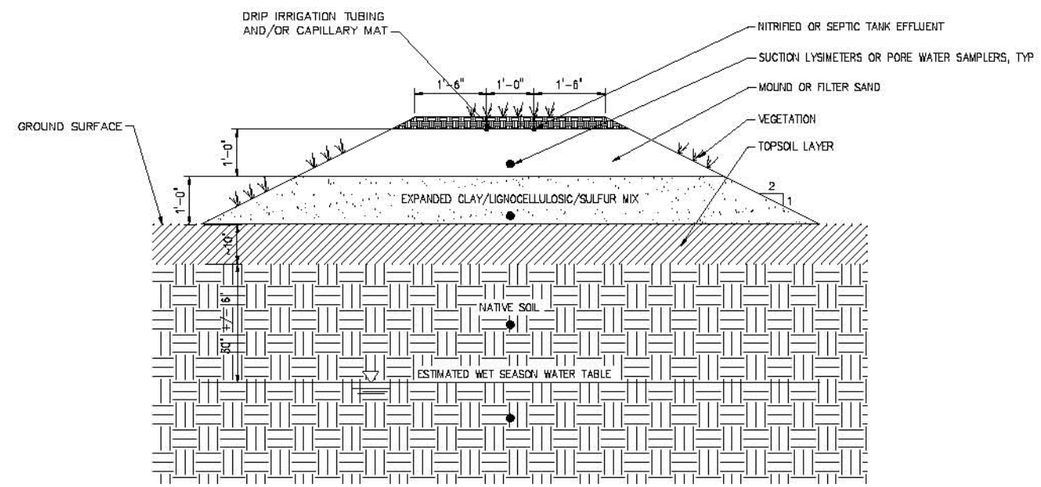

SECTION D / C-3
NTS

NO.	ISSUED FOR	DATE	BY

DESIGNED —
DRAWN —
CHECKED —
PROJ. ENGR. —
—
APPROVED

Name: Date:
Florida Professional Engineer's Registration Number: —

HAZEN AND SAWYER
Environmental Engineers & Scientists
10002 Princess Palm Avenue
Registry One Building, Suite 200
Tampa, Florida 33619
Certificate of Authorization Number: 2771

FLORIDA DEPARTMENT OF HEALTH
4052 BALD CYPRESS WAY, BIN A08
TALLAHASSEE, FL 32399-1713
(850)-245-4070

FLORIDA DEPARTMENT OF HEALTH
FLORIDA ONSITE SEWAGE NITROGEN REDUCTION STRATIGIES STUDY

PNRS II DETAILS

THE SCALE BAR SHOWN BELOW MEASURES ONE INCH LONG ON THE ORIGINAL DRAWING.

DATE AUGUST 2009
H & S JOB NUMBER 44237-001
CONTRACT NUMBER
DRAWING NUMBER C-4

PLOT DATE: 8/4/2009 1:57 PM

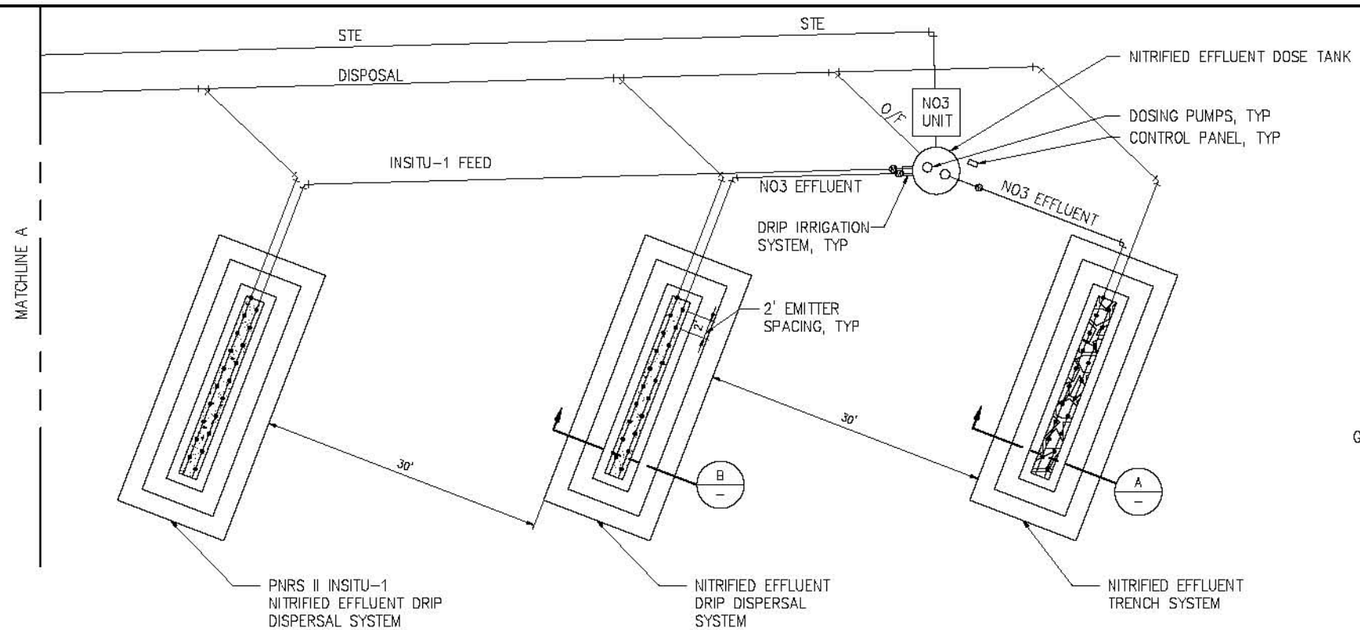

DETAIL 3 / C-2
NTS

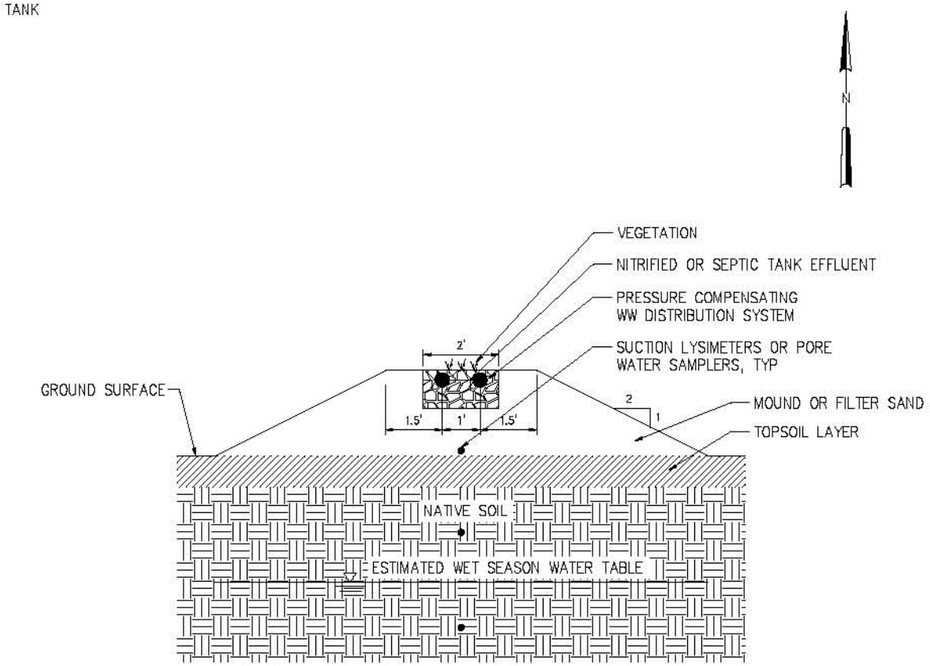

SECTION A
NTS

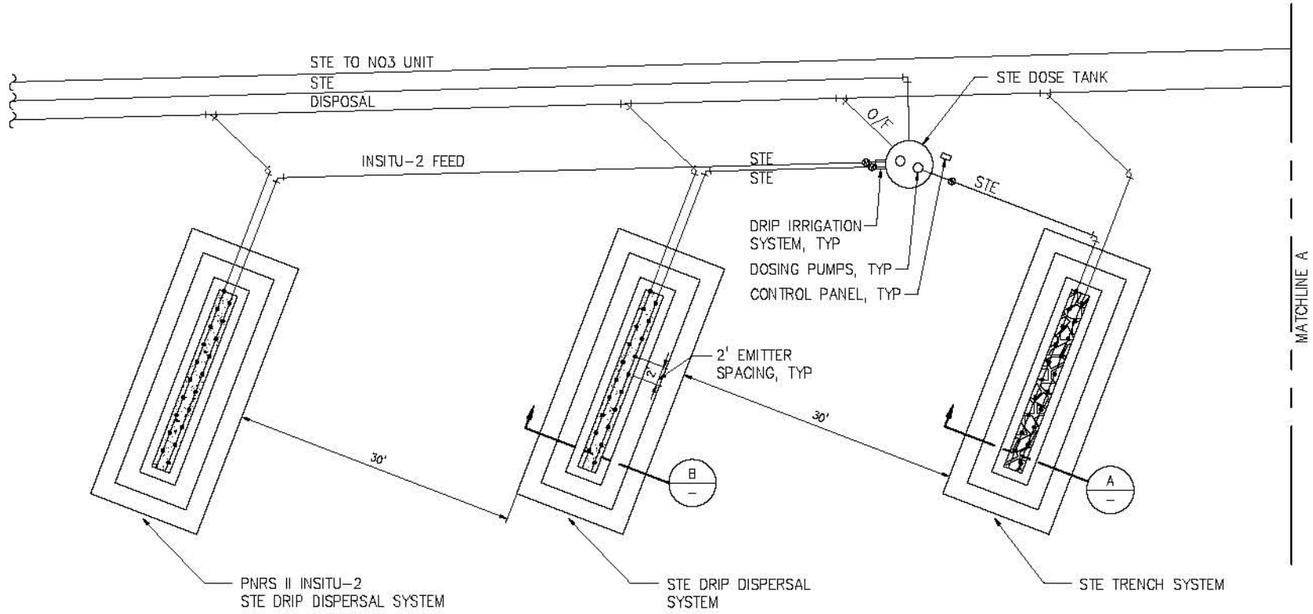

DETAIL 4 / C-2
NTS

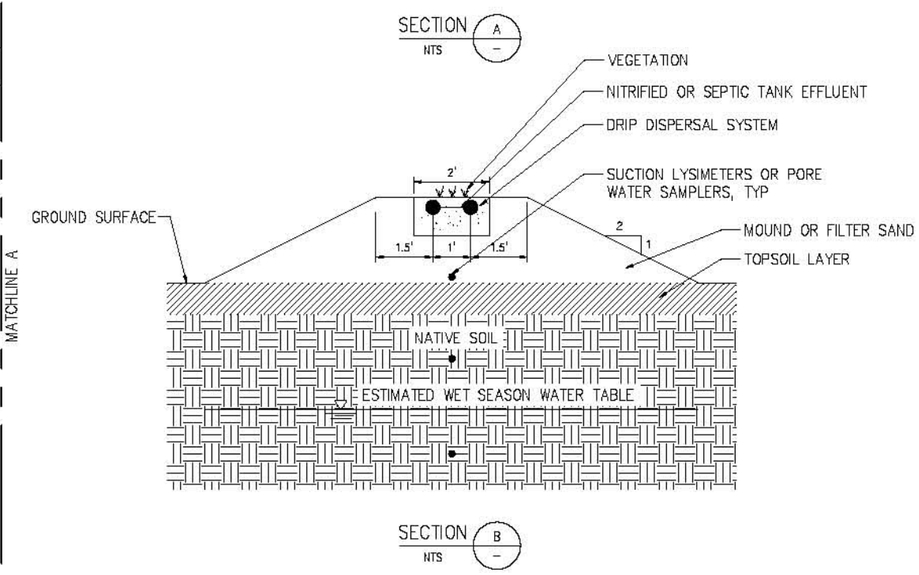

SECTION B
NTS

NO.	ISSUED FOR	DATE	BY

DESIGNED –
DRAWN –
CHECKED –
PROJ. ENGR. –
APPROVED –

Name: Date:
Florida Professional Engineer's Registration Number: –

HAZEN AND SAWYER
Environmental Engineers & Scientists
10002 Princess Palm Avenue
Registry One Building, Suite 200
Tampa, Florida 33619
Certificate of Authorization Number: 2771

FLORIDA DEPARTMENT OF HEALTH
4052 BALD CYPRESS WAY, BIN A08
TALLAHASSEE, FL 32399-1713
(850)-245-4070

FLORIDA DEPARTMENT OF HEALTH
FLORIDA ONSITE SEWAGE NITROGEN REDUCTION STRATIGIES STUDY

TASK C NITROGEN FATE & TRANSPORT STUDY
DETAILS

THE SCALE BAR SHOWN BELOW MEASURES ONE INCH LONG ON THE ORIGINAL DRAWING.

DATE AUGUST 2009
H & S JOB NUMBER 44237-001
CONTRACT NUMBER
DRAWING NUMBER C-5

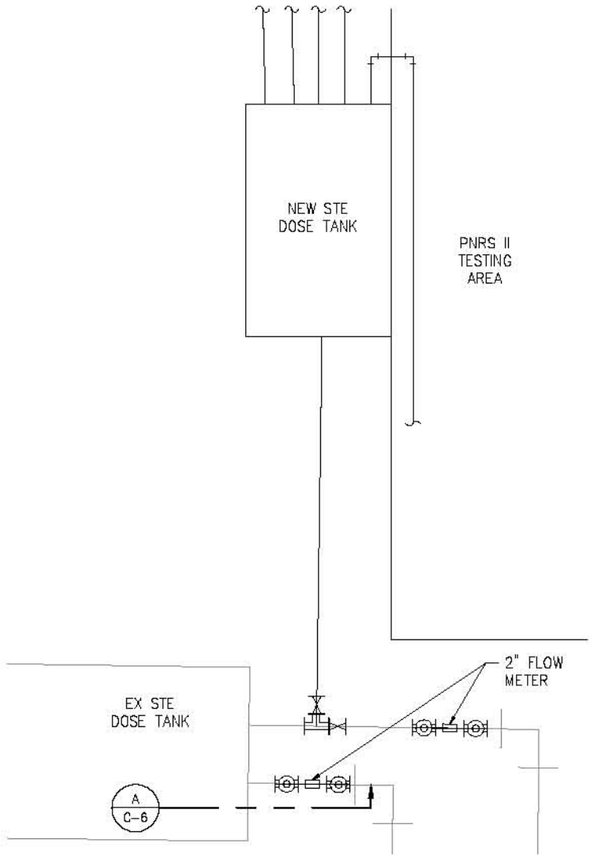

DETAIL 4 / C-2
NTS

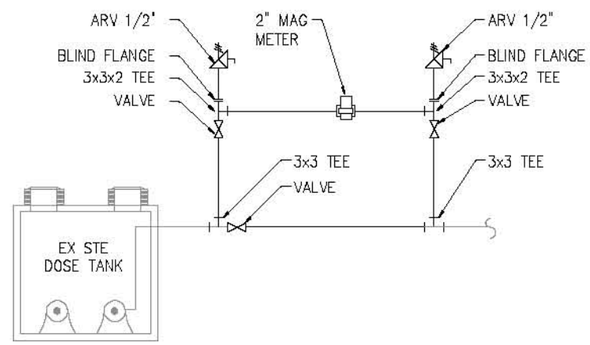

SECTION A / C-6
NTS

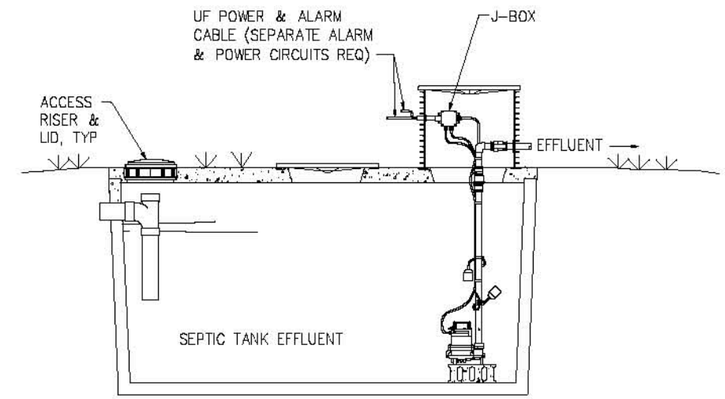

TYPICAL DOSE TANK

DETAIL 5 / M-1
NTS

NO.	ISSUED FOR	DATE	BY

DESIGNED –
DRAWN –
CHECKED –
PROJ. ENGR. –
–
APPROVED

Name: Date:
Florida Professional Engineer's Registration Number: –

HAZEN AND SAWYER
Environmental Engineers & Scientists
10002 Princess Palm Avenue
Registry One Building, Suite 200
Tampa, Florida 33619
Certificate of Authorization Number: 2771

FLORIDA DEPARTMENT OF HEALTH
4052 BALD CYPRESS WAY, BIN A08
TALLAHASSEE, FL 32399-1713
(850)-245-4070

FLORIDA DEPARTMENT OF HEALTH
FLORIDA ONSITE SEWAGE NITROGEN REDUCTION STRATIGIES STUDY

WASTEWATER SOURCE COMPONENTS DETAILS

THE SCALE BAR SHOWN BELOW MEASURES ONE INCH LONG ON THE ORIGINAL DRAWING.

DATE AUGUST 2009
H & S JOB NUMBER 44237-001
CONTRACT NUMBER
DRAWING NUMBER C-6

PLOT DATE: 8/4/2009 2:20 PM BY: JOSHUA
FILE = Q:\44237-001-TM\44237-001\drawings\001 Dwgs\Unit\C-6 TASK C DETAILS Saved by joshua.bon aug -- 8/4/2009 11:45 am

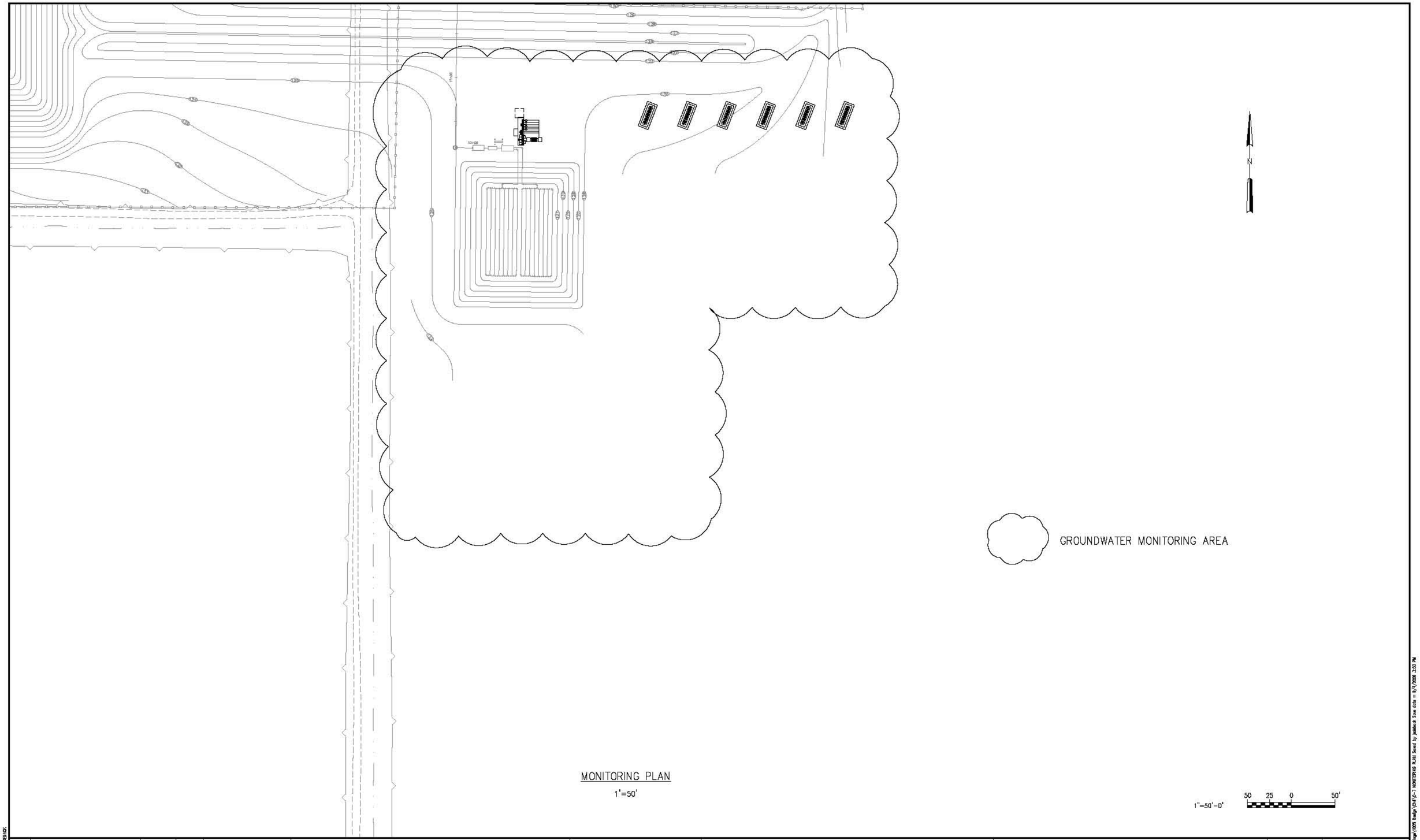

MONITORING PLAN

1"=50'

NO.	ISSUED FOR	DATE	BY

DESIGNED —
DRAWN —
CHECKED —
PROJ. ENGR. —
—
APPROVED

—
Name: Date:
Florida Professional Engineer's Registration Number: —

HAZEN AND SAWYER
Environmental Engineers & Scientists
10002 Princess Palm Avenue
Registry One Building, Suite 200
Tampa, Florida 33619
Certificate of Authorization Number: 2771

FLORIDA DEPARTMENT OF HEALTH
4052 BALD CYPRESS WAY, BIN A08
TALLAHASSEE, FL 32399-1713
(850)-245-4070

FLORIDA DEPARTMENT OF HEALTH

FLORIDA DEPARTMENT OF HEALTH
FLORIDA ONSITE SEWAGE NITROGEN REDUCTION STRATIGIES STUDY

MONITORING PLAN

THE SCALE BAR SHOWN BELOW MEASURES ONE INCH LONG ON THE ORIGINAL DRAWING.

DATE AUGUST 2009
H & S JOB NUMBER 44237-001
CONTRACT NUMBER
DRAWING NUMBER C-7

PLOT DATE: 8/6/2009 3:49 PM BY: KEVERVICK

File = G:\44237-001-TK\44237-001 Drawings\001 Design\C-7 MONITORING PLAN.dwg Saved by jackson Save date = 8/6/2009 3:03 PM

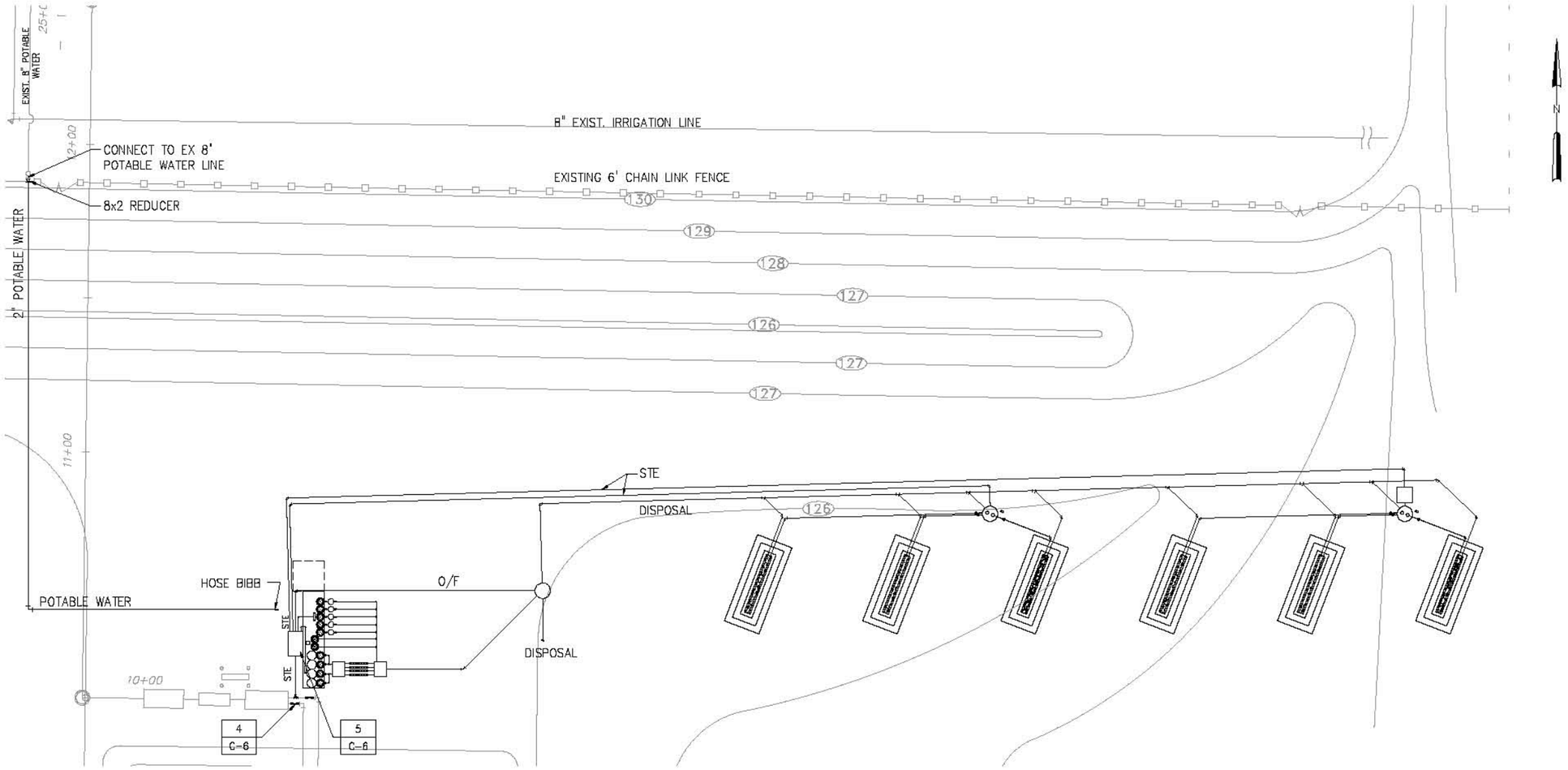

YARD PIPING PLAN

1"=20'

1"=20'-0'

20 10 0 20'

NO.	ISSUED FOR	DATE	BY

DESIGNED —
DRAWN —
CHECKED —
PROJ. ENGR. —
APPROVED —

Name: Date:
Florida Professional Engineer's Registration Number: —

HAZEN AND SAWYER
Environmental Engineers & Scientists
10002 Princess Palm Avenue
Registry One Building, Suite 200
Tampa, Florida 33619
Certificate of Authorization Number: 2771

FLORIDA DEPARTMENT OF HEALTH
4052 BALD CYPRESS WAY, BIN A08
TALLAHASSEE, FL 32399-1713
(850)-245-4070

FLORIDA DEPARTMENT OF HEALTH

FLORIDA DEPARTMENT OF HEALTH
FLORIDA ONSITE SEWAGE NITROGEN REDUCTION STRATIGIES STUDY

YARD PIPING PLAN

THE SCALE BAR SHOWN BELOW MEASURES ONE INCH LONG ON THE ORIGINAL DRAWING.

DATE AUGUST 2009
H & S JOB NUMBER 44237-001
CONTRACT NUMBER
DRAWING NUMBER M-1

PLOT DATE: 9/4/2009 2:57 PM BY: JEDEWICK

File = Q:\44237-001-79\1\44237-001\Drawings\005 Design\Mechanical\M-1 \YARD PIPING PLAN Saved by jedewick Save date = 9/4/2009 11:58 PM

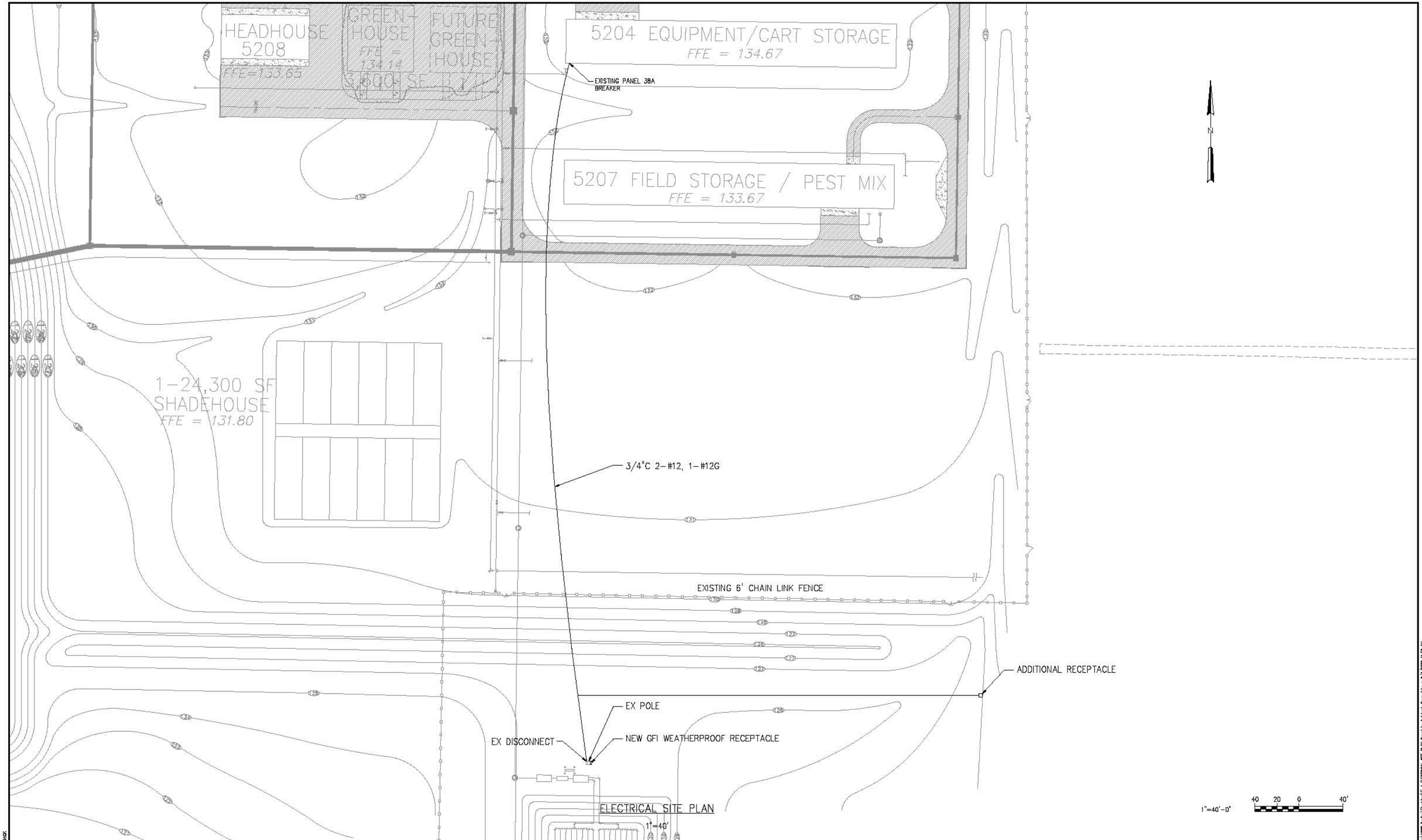

NO.	ISSUED FOR	DATE	BY

DESIGNED —
DRAWN —
CHECKED —
PROJ. ENGR. —
—.
APPROVED

—
Name: Date:
Florida Professional Engineer's Registration Number: —

HAZEN AND SAWYER
Environmental Engineers & Scientists
10002 Princess Palm Avenue
Registry One Building, Suite 200
Tampa, Florida 33619
Certificate of Authorization Number: 2771

FLORIDA DEPARTMENT OF HEALTH
4052 BALD CYPRESS WAY, BIN A08
TALLAHASSEE, FL 32399-1713
(850)-245-4070

FLORIDA DEPARTMENT OF HEALTH

FLORIDA DEPARTMENT OF HEALTH
FLORIDA ONSITE SEWAGE NITROGEN REDUCTION STRATIGIES STUDY

ELECTRICAL SITE PLAN

THE SCALE BAR SHOWN BELOW MEASURES ONE INCH LONG ON THE ORIGINAL DRAWING.

DATE AUGUST 2009
H & S JOB NUMBER 44237-001
CONTRACT NUMBER
DRAWING NUMBER E-1

PLOT DATE: 9/4/2009 2:59 PM BY: KEREVICK
File = G:\44237-005-TPA\44237-001\Drawings\005 Design\Electrical\E-1 ELECTRICAL SITE PLAN.Dwg Saved by kerevick Save date = 9/4/2009 11:29 AM