FLORIDA ONSITE SEWAGE NITROGEN REDUCTION STRATEGIES STUDY FINAL DESIGN DOCUMENTS

LIST OF DRAWINGS

SHEET COUNT	SHEET NUMBER	SHEET TITLE
		GENERAL
1	G-1	COVER SHEET AND INDEX OF DRAWINGS
2	G-2	LEGENDS AND NOTES
		CIVIL
3	C-1	EXISTING ONSITE WASTEWATER TREATMENT SYSTEM
4	C-2	OVERALL PROPOSED SITE PLAN
5	C-3	PROCESS FLOW DIAGRAM
6	C-4	HYDRAULIC PROFILE PNRS II
7	C-5	PNRS II DETAILS
8	C-6	PNRS II DETAILS
9	C-7	TASK C NITROGEN FATE & TRANSPORT STUDY AND PNRS II IN-SITU SYSTEMS
10	C-8	WASTEWATER SOURCE COMPONENTS DETAILS
11	C-9	MONITORING PLAN
		STRUCTURAL
12	S-1	PNRS II STRUCTURAL SITE PLAN
13	S-2	PNRS II STRUCTURAL SITE PLAN AND DETAILS
14	S-3	PNRS II STRUCTURAL SITE PLAN AND DETAILS
		MECHANICAL
15	M-1	YARD PIPING PLAN
		ELECTRICAL
16	E-1	ELECTRICAL SITE PLAN
17	E-2	ELECTRICAL SITE PLAN AND DETAILS
		INSTRUMENTATION
18	I-1	PANEL POWER
19	I-2	DI MODULE 1
20	I-3	DI MODULE 2
21	I-4	DI MODULE 3
22	I-5	DO MODULE 1
23	I-6	DO MODULE 2
24	I-7	PANEL ELEVATIONS
25	I-8	BILL OF MATERIALS
26	I-9	FUNCTIONAL CONTROL DESCRIPTIONS
27	I-10	FUNCTIONAL CONTROL DESCRIPTIONS

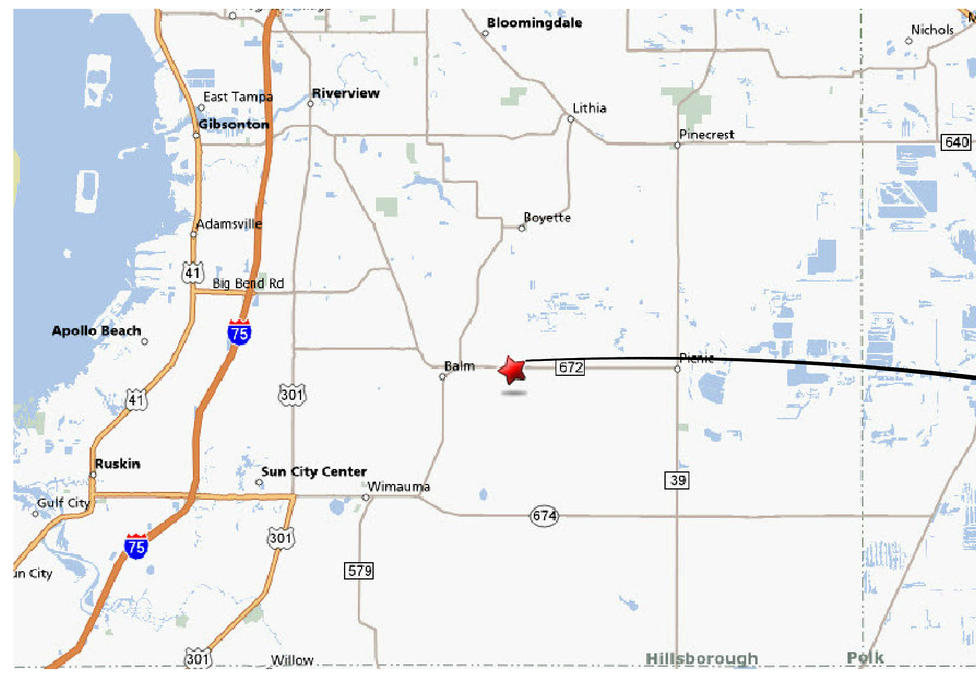

LOCATION MAP

N.T.S.

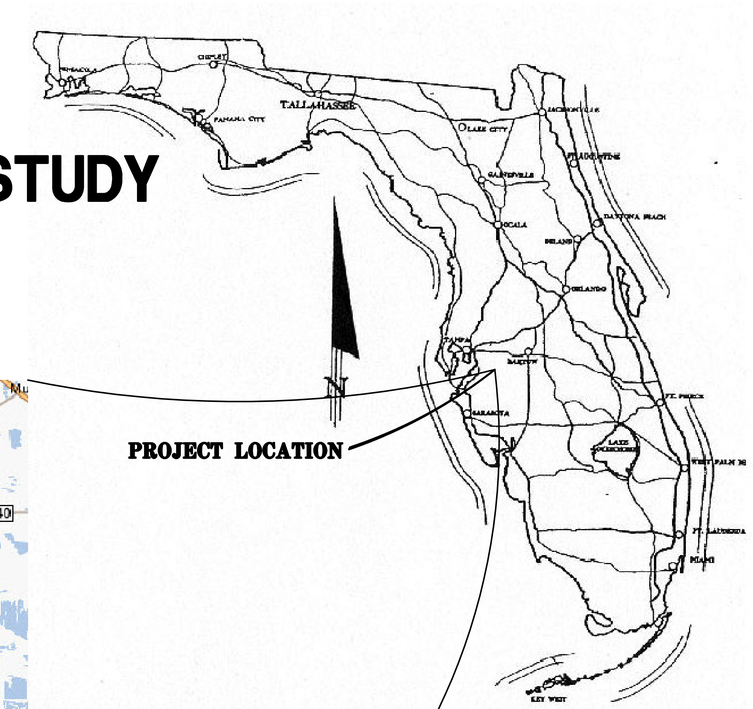

PROJECT LOCATION
UNIVERSITY OF FLORIDA
GULF COAST RESEARCH AND
EDUCATION CENTER
WIMAUMA, FL.

HAZEN AND SAWYER
Environmental Engineers & Scientists

10002 Princess Palm Ave., Suite 200
Tampa, Florida 33619
Certificate of Authorization Number: 2771

FLORIDA DEPARTMENT OF HEALTH

FLORIDA DEPARTMENT OF HEALTH
4052 BALD CYPRESS WAY, BIN A08
TALLAHASSEE, FLORIDA 32399-1713
(850)-245-4070

SECTION IDENTIFICATION

(1) SECTION CUT ON DRAWING G–1:

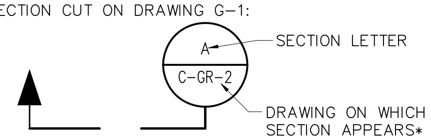

(2) ON DRAWING G–2 THIS SECTION IS IDENTIFIED AS:

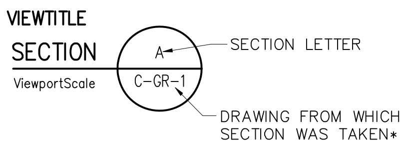

DETAIL IDENTIFICATION

(1) DETAIL CALL–OUT ON DRAWING G–1 AS:

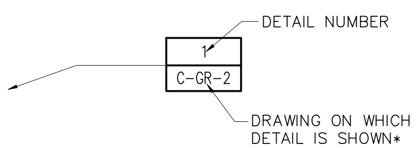

(2) ON DRAWING G–2 THIS DETAIL IDENTIFIED AS:

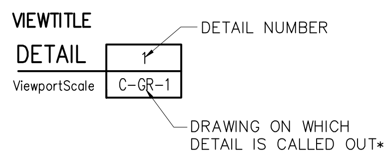

SITE GENERAL NOTES

1. THE TOPOGRAPHIC INFORMATION SHOWN HEREON IS BASED ON A SURVEY AS PREPARED BY PHOTOGRAMMETRIC TECHNOLOGIES, INC. DATED FEBRUARY 2, 2003. THE BOUNDARY SURVEY IS AS PROVIDED BY U.F. I.F.A.S.

2. CONTRACTOR TO REVIEW GEOTECHNICAL REPORT AND BORINGS PRIOR TO BIDDING THE PROJECT AND FOLLOW OUTLINED CONSTRUCTION TECHNIQUES.

3. THE CONTRACTOR IS RESPONSIBLE FOR COORDINATING APPLICABLE TESTING WITH THE SERVICES OF AN APPROVED TESTING LABORATORY AND SOILS ENGINEER, AS REQUIRED BY APPLICABLE REGULATORY AGENCIES AND AS MAY BE FOUND IN THE ENGINEERING CONSTRUCTION DRAWINGS. CONTRACTOR TO VERIFY ALL TESTING WITH THE OWNER PRIOR TO COMMENCING CONSTRUCTION. UPON COMPLETION OF THE WORK, THE SOILS ENGINEER MUST SUBMIT TO THE OWNER'S ENGINEER CERTIFICATIONS STATING THAT ALL REQUIREMENTS HAVE BEEN MET.

4. THE CONTRACTOR IS RESPONSIBLE FOR REPAIRING ANY DAMAGE TO EXISTING FACILITIES, ABOVE OR BELOW GROUND THAT MAY OCCUR AS A RESULT OF THE WORK PERFORMED BY THE CONTRACTOR.

5. IT IS THE CONTRACTOR'S RESPONSIBILITY TO BECOME FAMILIAR WITH THE PERMIT AND INSPECTION REQUIREMENTS OF THE VARIOUS GOVERNMENTAL AGENCIES. THE CONTRACTOR SHALL OBTAIN ALL NECESSARY PERMITS PRIOR TO CONSTRUCTION, AND SCHEDULE INSPECTIONS ACCORDING TO AGENCY INSTRUCTIONS.

6. ALL WORK PERFORMED SHALL COMPLY WITH THE REGULATIONS AND ORDINANCES OF THE VARIOUS GOVERNMENTAL AGENCIES HAVING JURISDICTION OVER THE WORK INCLUDING LANDSCAPING.

7. REPAIR AND REPLACEMENT OF ALL PRIVATE AND PUBLIC PROPERTY AFFECTED BY THIS WORK SHALL BE RESTORED TO A CONDITION EQUAL TO OR BETTER THEN EXISTING CONDITIONS BEFORE COMMENCING CONSTRUCTION WORK UNLESS SPECIFICALLY EXEMPTED BY THE PLANS. ADDITIONAL COSTS ARE INCIDENTAL TO OTHER CONSTRUCTION AND NO EXTRA COMPENSATION WILL BE ALLOWED.

8. RECORD DRAWINGS:
THE CONTRACTOR SHALL BE RESPONSIBLE FOR RECORDING INFORMATION ON A SET OF THE APPROVED PLANS CONCURRENTLY WITH CONSTRUCTION PROGRESS. WITHIN TWO WEEKS FOLLOWING FINAL INSPECTIONS THE CONTRACTOR SHALL SUBMIT ONE SET OF DRAWINGS TO THE ENGINEER OF RECORD. THE FINAL RECORD DRAWINGS SHALL COMPLY WITH THE FOLLOWING REQUIREMENTS:

A. DRAWING TO BE LEGIBLY MARKED TO RECORD ACTUAL CONSTRUCTION.

B. DRAWINGS SHALL SHOW ACTUAL LOCATION OF ALL UTILITIES AND RELATED ITEMS, BOTH ABOVE AND BELOW GROUND. ALL CHANGES TO PIPING LOCATION INCLUDING HORIZONTAL AND VERTICAL LOCATIONS OF UTILITIES SHALL BE CLEARLY SHOWN AND REFERENCED TO PERMANENT SURFACE IMPROVEMENTS. DRAWINGS SHALL ALSO SHOW ACTUAL INSTALLED PIPE MATERIAL.

C. DRAWINGS SHALL CLEARLY SHOW ALL FIELD CHANGES OF DIMENSION AND DETAIL.

D. DRAWINGS SHALL CLEARLY SHOW ALL DETAILS NOT ON ORIGINAL CONTRACT DRAWINGS BUT CONSTRUCTED IN THE FIELD. ALL EQUIPMENT AND PIPING RELOCATIONS SHALL BE CLEARLY SHOWN.

E. LOCATIONS OF ALL MANHOLES, HYDRANTS, VALVES AND VALVE BOXES SHALL BE SHOWN.

F. THE CONTRACTOR SHALL PROVIDE CERTIFIED RECORD DRAWING, SIGNED AND SEALED BY A PROFESSIONAL LAND SURVEYOR. THE RECORD DRAWINGS SHALL SHOW FINAL GRADES AND LOCATIONS ON ALL UTILITIES INCLUDING THE SANITARY SEWER, WATER, PRODUCT PIPING, AND STORM WATER COLLECTION SYSTEM (I.E. PIPES, INLETS, AND PONDS). THE CONTRACTOR SHALL PROVIDE TEN COPIES OF THE CERTIFIED RECORD DRAWINGS TO THE OWNER.

9. IT SHALL BE THE SOLE RESPONSIBILITY OF THE CONTRACTOR TO COMPLY WITH AND ENFORCE ALL APPLICABLE SAFETY REGULATIONS.

10. ALL DELETERIOUS MATERIAL (I.E. MUCK, PEAT, BURIED DEBRIS) IS TO BE EXCAVATED IN ACCORDANCE WITH THESE PLANS OR AS DIRECTED BY THE OWNER'S ENGINEER OR OWNER'S SOIL TESTING COMPANY. DELETERIOUS MATERIAL IS TO BE STOCKPILED AND REMOVED FROM THE CAMPUS AREA AND PLACED ON–SITE AS DIRECTED BY THE OWNERS REPRESENTATIVE. EXCAVATED AREAS ARE TO BE BACKFILLED WITH APPROVED MATERIALS AND COMPACTED AS SHOWN ON THESE AREAS.

11. THE CONTRACTOR SHALL BE RESPONSIBLE FOR PROTECTING EXCAVATIONS AGAINST COLLAPSE AND SHALL PROVIDE BRACING, SHEETING OR SHORING AS NECESSARY. TRENCHES SHALL BE KEPT DRY WHILE PIPES ARE BEING PLACED. DEWATERING SHALL BE USED AS REQUIRED, AND PERMITTED THROUGH LOCAL GOVERNMENTAL AGENCIES AND WATER MANAGEMENT DISTRICT PER CURRENT REGULATIONS AT THE SOLE COST OF THE CONTRACTOR.

CONSTRUCTION NOTES

1. ALL MATERIALS AND WORK SHALL COMPLY WITH REQUIREMENTS OF CHAPTER 64E–6, FLORIDA ADMINISTRATIVE CODE (FAC), AND REQUIREMENTS, OF PERMITS ISSUED FOR THIS CONSTRUCTION. SHOP DRAWINGS FOR ALL COMPONENTS SHALL BE SUBMITTED TO THE ENGINEER FOR APPROVAL PRIOR TO ORDERING SYSTEM COMPONENTS.

2. CONTRACTOR SHALL BE RESPONSIBLE FOR APPLYING FOR AND OBTAINING APPROPRIATE PERMITS AND FOR SCHEDULE/COORDINATING INSPECTIONS, REVIEWS, AND APPROVALS

3. LOCATIONS SHOWN ON THESE DRAWINGS ARE APPROXIMATE AND MAY BE FIELD ADJUSTED WITH APPROVAL OF OWNER AND HEALTH DEPARTMENT.

4. ENGINEER OF RECORD IS REQUIRED TO DO AN INITIAL INSPECTION. CONTRACTOR TO CALL (48) HOURS PRIOR TO INSPECTION TO REQUEST AN INSPECTOR.

WATER AND WASTEWATER GENERAL NOTES

1. ALL WATER AND WASTEWATER INSTALLATION CONSTRUCTION AND MATERIALS SHALL BE IN ACCORDANCE WITH THE SPECIFICATIONS ON DRAWINGS AND INCLUDED DETAILS.

2. IF THE VERTICAL CLEARANCE AT CROSSING POINTS OF WATER AND SANITARY SEWER LINES IS LESS THAN 18" (IN), THE SANITARY SEWER LINE SHALL THEN BE ENCASED IN A WATER TIGHT CARRIER PIPE FOR 10' (FT) EACH SIDE OF THE CROSSING POINT.

3. CONTRACTOR SHALL SUBMIT FOR REVIEW TO THE OWNER AND OWNER'S ENGINEER SHOP DRAWINGS ON ALL PRECAST AND MANUFACTURED ITEMS TO BE USED ON THIS SITE. FAILURE TO OBTAIN APPROVAL BEFORE INSTALLATION MAY RESULT IN REMOVAL AND REPLACEMENT AT CONTRACTOR'S EXPENSE. ENGINEER'S APPROVAL OF A SHOP DRAWING DOES NOT RELIEVE THE CONTRACTOR'S RESPONSIBILITY FOR THE PERFORMANCE OF THE ITEM.

4. THE CONTRACTOR IS RESPONSIBLE FOR ANY NECESSARY UTILITY FIELD LOCATIONS, RELOCATIONS AS REQUIRED, SHALL BE COORDINATED BY THE CONTRACTOR.

5. THE HORIZONTAL SEPARATION BETWEEN WATER MAINS AND PERMANENT STRUCTURES, TREES AND SANITARY SEWER MAINS SHALL BE 10' (FT) MINIMUM.

6. THE HORIZONTAL SEPARATION BETWEEN SEWER MAINS AND PERMANENT STRUCTURES AND TREES SHALL BE 15' (FT) MINIMUM.

7. WATER MAIN MATERIALS SHALL BE:
   4" – 12" MAINS SHALL BE PER AWWA, C900, DR18, CLASS 150.
   2" AND SMALLER LINES SHALL BE PVC SCHEDULE 80 WITH PRESSURE RATING OF 200.

8. SANITARY SEWER PIPE MATERIALS SHALL BE:
   4" – 8" SEWER SHALL BE PVC, SDR26 MEETING ASTM D3034.
   4" AND SMALLER LINES SHALL BE PVC SCHEDULE 80 WITH PRESSURE RATING OF 200.
   MINIMUM SLOPE FOR LATERALS SHALL BE 1.00%.

9. PROJECT IS LOCATED IN THE HILLSBOROUGH FIRE DISTRICT, STATION NO. 3.

SUMMARY OF TANKAGE

TANK	TANK DESCRIPTION	SIZE	MATERIAL
TANK 1	NEW STE TWO COMPARTMENT DOSING TANK	1050 GAL	CONCRETE
TANK 2	EXISTING STAGE 2 SEPTIC TANK	1250 GAL	CONCRETE
TANK 3	NEW DENITE FEED TANK	30 GAL	PLASTIC
TANK 4	NEW STE DRIP STORAGE TANK	150 GAL	CONCRETE
TANK 5	NEW NO3 DRIP STORAGE TANK	150 GAL	CONCRETE

LEGEND

EXISTING		SITE PLAN	
—99—	EXISTING ELEVATION CONTOUR	▭	NEW BUILDING
×93.2	EXISTING SPOT ELEVATION		NEW SHELL GRAVEL
—x—	EXISTING FENCE	— — —	NEW GRAVITY LINE
—SS—	EXISTING SANITARY SEWER LINE & MANHOLE	——	NEW PRESSURE LINE
—W—	EXISTING WATER LINE & VALVE		NEW FLOW METER
—ST—	EXISTING STORM LINE & STRUCTURE		NEW CHECK VALVE
—E—	EXISTING ELECTRIC LINE		NEW BALL VALVE NORMALLY CLOSED
—OPL—	EXISTING OVERHEAD POWER LINE		NEW BALL VALVE NORMALLY OPEN
—GAS—	EXISTING GAS LINE		NEW PINCH VALVE (PNEUMATIC) NORMALLY CLOSED
	EXISTING LIGHT		NEW PINCH VALVE (PNEUMATIC) NORMALLY OPEN
	EXISTING UTILITY POLE		NEW RECIRCULATION VALVE
	EXISTING WOOD POWER POLE		NEW WATER MAIN WITH GATE VALVE & BOX
te	EXISTING TELEPHONE PEDESTAL	—SF—	NEW SILT FENCE LINE
	EXISTING GUY ANCHOR	150	NEW ELEVATION CONTOUR
W	EXISTING WELL	S–10	NEW STORM STRUCTURE IDENTIFICATION
	EXISTING WATER METER	•100.00	NEW SPOT ELEVATION
	EXISTING FIRE HYDRANT		DIRECTION OF SURFACE DRAINAGE FLOW
—TE—	EXISTING UNDERGROUND TELEPHONE LINE		
	EXISTING TREE (SIZE & TYPE)		
	EXISTING STRUCTURE		
	PROJECT BENCHMARK		

ELECTRICAL LEGEND

(E)	EQUIPMENT CONNECTION OUTLET – VERIFY LOCATION
(J)	JUNCTION BOX
[T]	TRANSFORMER
	DISTRIBUTION SWITCHBOARD OR PANELBOARD
	BRANCH CIRCUIT PANELBOARD
——	CONDUIT
1L1–1,3	HOMERUN TO PANELBOARD. "L1" INDICATES THE PANELBOARD NUMBER. "1,3" INDICATES THE BRANCH CIRCUIT NUMBERS. HATCH MARKS DENOTE NUMBER OF CONDUCTORS EXCLUDING GROUND CONDUCTOR. NO HATCH MARKS DENOTES TWO #12 CONDUCTORS AND ONE #12 GROUNDING CONDUCTOR
—U—	UNDERGROUND CONDUIT
C——	CONDUIT STUB–UP
(1L1)—	PANELBOARD NUMBER

ELECTRICAL ABBREVIATIONS

A	AMPS
AFF	ABOVE FINISHED FLOOR
AICS	AMPS INTERRUPTING CAPACITY SYMMETRICAL
BKR	BREAKER
C	CONDUIT
CLG	CEILING
CKT	CIRCUIT
CU	COPPER
EF	EXHAUST FAN
EMT	ELECTRICAL METALLIC TUBING
FU	FUSE
FLR	FLOOR
GFI	GROUND FAULT INTERRUPTER
GRD	GROUND
HOA	HAND–OFF–AUTOMATIC
HP	HORSEPOWER
IMC	INTERMEDIATE METAL CONDUIT
K	KILO
LTG	LIGHTING
MTD	MOUNTED
NEC	NATIONAL ELECTRICAL CODE
OHP	OVERHEAD PRIMARY
P	POLE
PWR	POWER
UGE	UNDERGROUND ELECTRIC
UL	UNDERWRITERS LABORATORIES
UNO	UNLESS NOTED OTHERWISE
V	VOLTS
VA	VOLT–AMPERES
W	WATTS
WP	WEATHERPROOF
ø	PHASE

SUMMARY OF PUMPS

PUMP	PUMP LOCATION	TYPE	MANUFACTURER/MAKE	MODEL
P1	TANK 2	SUBMERSIBLE	GOULDS BLASTER	33EB05
P2	TANK 1	SUBMERSIBLE	LITTLE GIANT	5–MSP
P3	TANK 1	SUBMERSIBLE	LITTLE GIANT	5–MSP
P4	TANK 1	SUBMERSIBLE	LITTLE GIANT	5–MSP
P5	DOSES INSITU STAGE 1 BIOFILTERS	PERISTALTIC	MASTERFLEX	R–07523–80
P6	RECIRCULATION DOSE TANK 1	SUBMERSIBLE	LITTLE GIANT	5–MSP
P7	RECIRCULATION DOSE TANK 2	SUBMERSIBLE	LITTLE GIANT	5–MSP
P8	RECIRCULATION DOSE TANK 3	SUBMERSIBLE	LITTLE GIANT	5–MSP
P9	RECIRCULATION DOSE TANK 4	SUBMERSIBLE	LITTLE GIANT	5–MSP
P10	DOSES STAGE 2 BIOFILTERS	PERISTALTIC	MASTERFLEX	R–07253–90
P11	NOT USED			
P12	TANK 4	SUBMERSIBLE	GOULDS BLASTER	20EB05
P13	TANK 5	SUBMERSIBLE	GOULDS BLASTER	20EB05
P14	TANK 1	SUBMERSIBLE	LITTLE GIANT	5–MSP
P15	TANK 4	SUBMERSIBLE	LITTLE GIANT	5–MSP

NO.	ISSUED FOR	DATE	BY
4	FINAL SUBMITTAL	01/10	–
3	100% SUBMITTAL	12/09	–
2	75% SUBMITTAL	12/09	–
1	50% SUBMITTAL	08/09	–

DESIGNED JME
DRAWN CMS
CHECKED DBS
PROJ. ENGR. JME
DLA
APPROVED

JOSEFIN M. EDEBACK
Name: Date:
Florida Professional Engineer's Registration Number: 69835

HAZEN AND SAWYER
Environmental Engineers & Scientists
10002 Princess Palm Avenue
Registry One Building, Suite 200
Tampa, Florida 33619
Certificate of Authorization Number: 2771

FLORIDA DEPARTMENT OF HEALTH
4052 BALD CYPRESS WAY, BIN A08
TALLAHASSEE, FL 32399-1713
(850)-245-4070

FLORIDA DEPARTMENT OF HEALTH
FLORIDA ONSITE SEWAGE NITROGEN REDUCTION STRATIGIES STUDY

LEGENDS AND NOTES

THE SCALE BAR SHOWN BELOW MEASURES ONE INCH LONG ON THE ORIGINAL DRAWING.

DATE FEBRUARY 2010
H & S JOB NUMBER 44237–001
CONTRACT NUMBER
DRAWING NUMBER G–2

PLOT DATE: 3/4/2010 9:36 AM BY: JEDEBACK
File = O:\44237-000-lpo\44237-001\Drawings\final design - c.13\General\G-2 LEGENDS AND NOTES Saved by jedeback Save date = 3/4/2010 9:05 AM

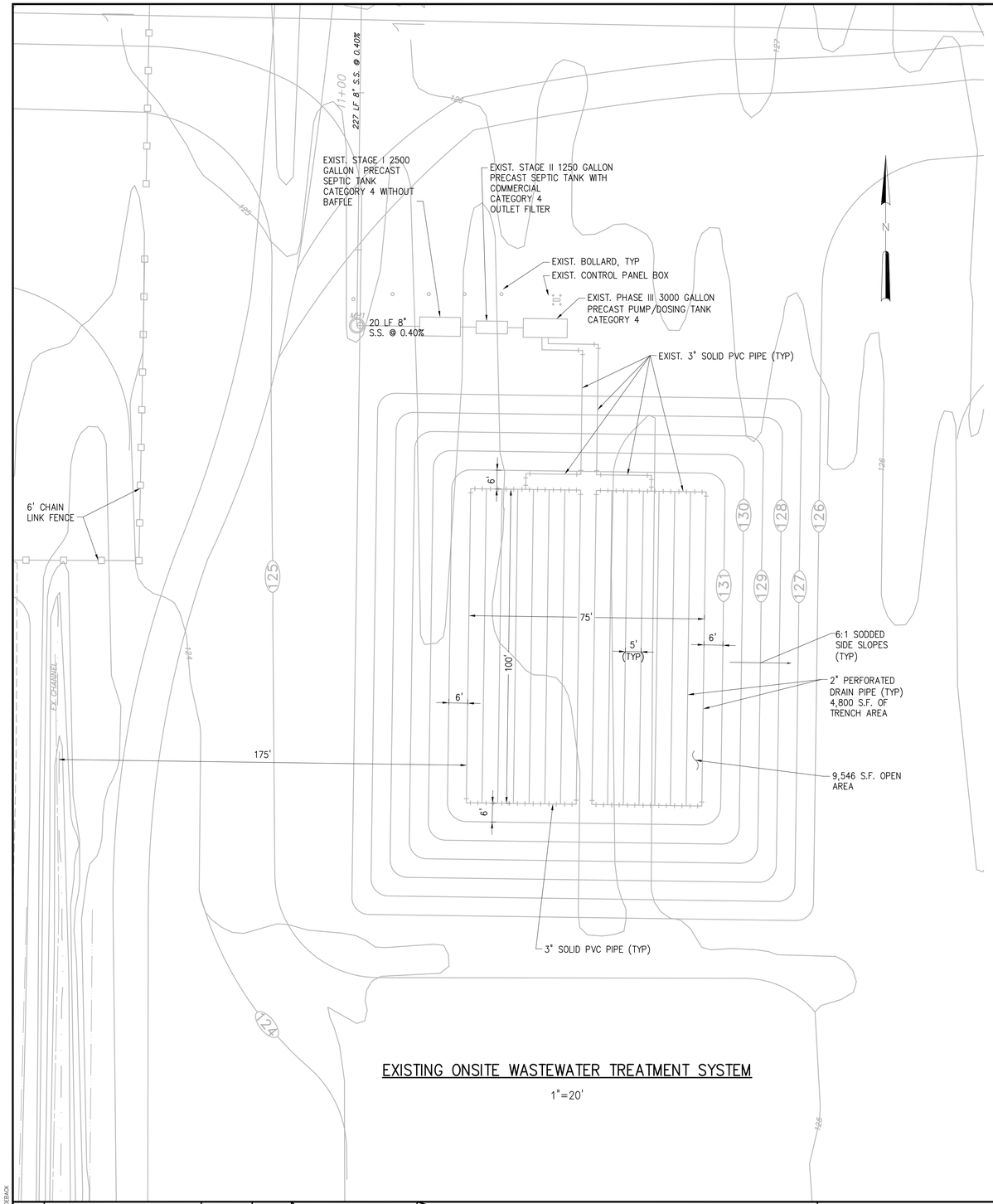

EXISTING ONSITE WASTEWATER TREATMENT SYSTEM

1"=20'

EXISTING DRAIN FIELD CALCULATION

BASED ON UNSUITABLE SUBSURFACE CONDITIONS

LOAD RATE = 0.65
TRENCH AREA = 2828 GPD/0.65 = 4351 SF
OPEN AREA = 2 x 4351 SF = 8702 SF

EXISTING SYSTEM FLOW CALCULATION

DESIGN FLOW (PER 64E-6.008(1b) TABLE 1)

ADMIN/STAFF (100x15)	= 1500 GPD
SCHOOL [STUDENT BOARDING TYPE] (16 x 75 GPD)	= 1200 GPD
ADD FOR SHOWERS (16 x 4)	= 64 GPD
ADD FOR CAFETERIA (16 x 4)	= 64 GPD
TOTAL	= 2828 GPD

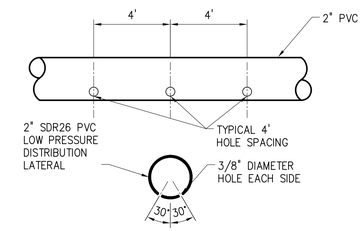

EXISTING HOLE SPACING DETAIL

N.T.S.

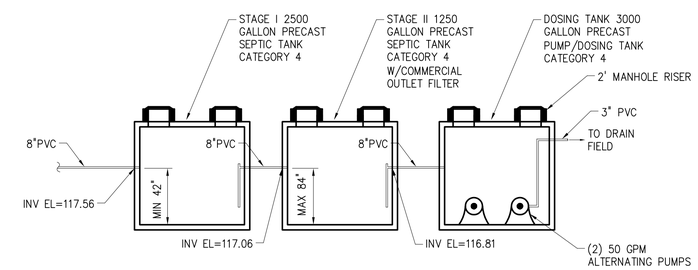

EXISTING SEPTIC TANK CROSS-SECTION

N.T.S.

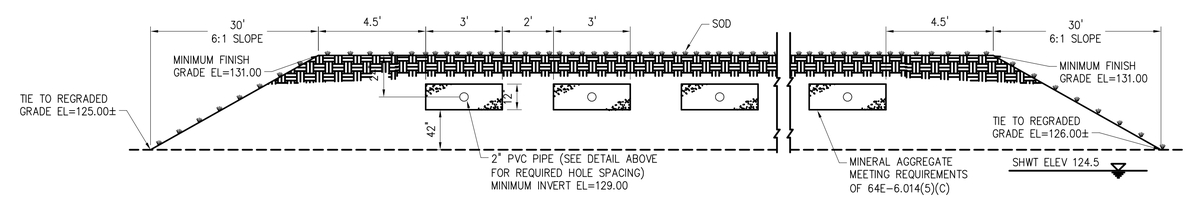

TYPICAL SECTION THRU EXISTING DRAIN FIELD

N.T.S.

1"=20'-0" 20 10 0 20'

NO.	ISSUED FOR	DATE	BY
4	FINAL SUBMITTAL	01/10	–
3	100% SUBMITTAL	12/09	–
2	75% SUBMITTAL	12/09	–
1	50% SUBMITTAL	08/09	–

DESIGNED –
DRAWN CMS
CHECKED DBS
PROJ. ENGR. JME
APPROVED DLA

JOSEFIN M. EDEBACK
Name: Date:
Florida Professional Engineer's Registration Number: 69835

HAZEN AND SAWYER
Environmental Engineers & Scientists
10002 Princess Palm Avenue
Registry One Building, Suite 200
Tampa, Florida 33619
Certificate of Authorization Number: 2771

FLORIDA DEPARTMENT OF HEALTH
4052 BALD CYPRESS WAY, BIN A08
TALLAHASSEE, FL 32399-1713
(850)-245-4070

FLORIDA DEPARTMENT OF HEALTH
FLORIDA ONSITE SEWAGE NITROGEN REDUCTION STRATIGIES STUDY

EXISTING ONSITE WASTEWATER TREATMENT SYSTEM

THE SCALE BAR SHOWN BELOW MEASURES ONE INCH LONG ON THE ORIGINAL DRAWING.

DATE FEBRUARY 2010
H & S JOB NUMBER 44237-001
CONTRACT NUMBER
DRAWING NUMBER C-1

PLOT DATE: 3/4/2010 11:36 AM BY: JEDEBACK

File = O:\44237-000-tpo\44237-001\Drawings\final design - c.13\Civil\C-1 EXISTING SEPTIC TANK SYSTEM Saved by jedeback Save date = 3/4/2010 11:36 AM

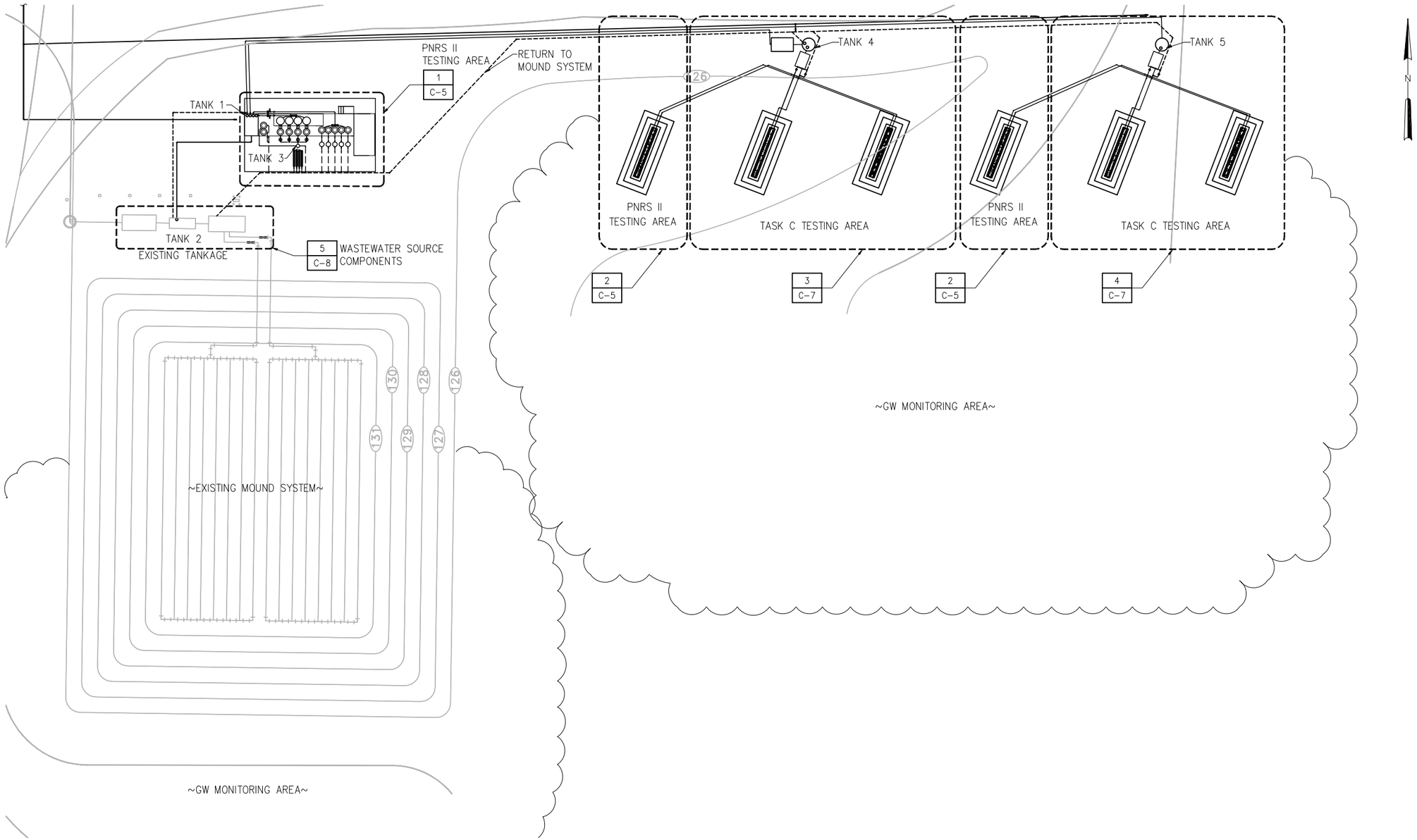

PROPOSED SITE PLAN

1"=20'

1"=20'-0" 20 10 0 20'

NO.	ISSUED FOR	DATE	BY
4	FINAL SUBMITTAL	01/10	–
3	100% SUBMITTAL	12/09	–
2	75% SUBMITTAL	12/09	–
1	50% SUBMITTAL	08/09	–

DESIGNED JME
DRAWN CMS
CHECKED DBS
PROJ. ENGR. JME
DLA
APPROVED

JOSEFIN M. EDEBACK
Name: Date:
Florida Professional Engineer's Registration Number: 69835

HAZEN AND SAWYER
Environmental Engineers & Scientists
10002 Princess Palm Avenue
Registry One Building, Suite 200
Tampa, Florida 33619
Certificate of Authorization Number: 2771

FLORIDA DEPARTMENT OF HEALTH
4052 BALD CYPRESS WAY, BIN A08
TALLAHASSEE, FL 32399-1713
(850)-245-4070

FLORIDA DEPARTMENT OF HEALTH
FLORIDA ONSITE SEWAGE NITROGEN REDUCTION STRATIGIES STUDY

OVERALL PROPOSED SITE PLAN

THE SCALE BAR SHOWN BELOW MEASURES ONE INCH LONG ON THE ORIGINAL DRAWING.

DATE FEBRUARY 2010
H & S JOB NUMBER 44237-001
CONTRACT NUMBER
DRAWING NUMBER C-2

PLOT DATE: 3/4/2010 8:36 AM BY: JEDEBACK

File = G:\44237-001-Jim\44237-001\Drawings\Final design - c-13\Civil\C-2 OVERALL SITE PLAN Saved by jedeback Save date = 3/4/2010 8:32 AM

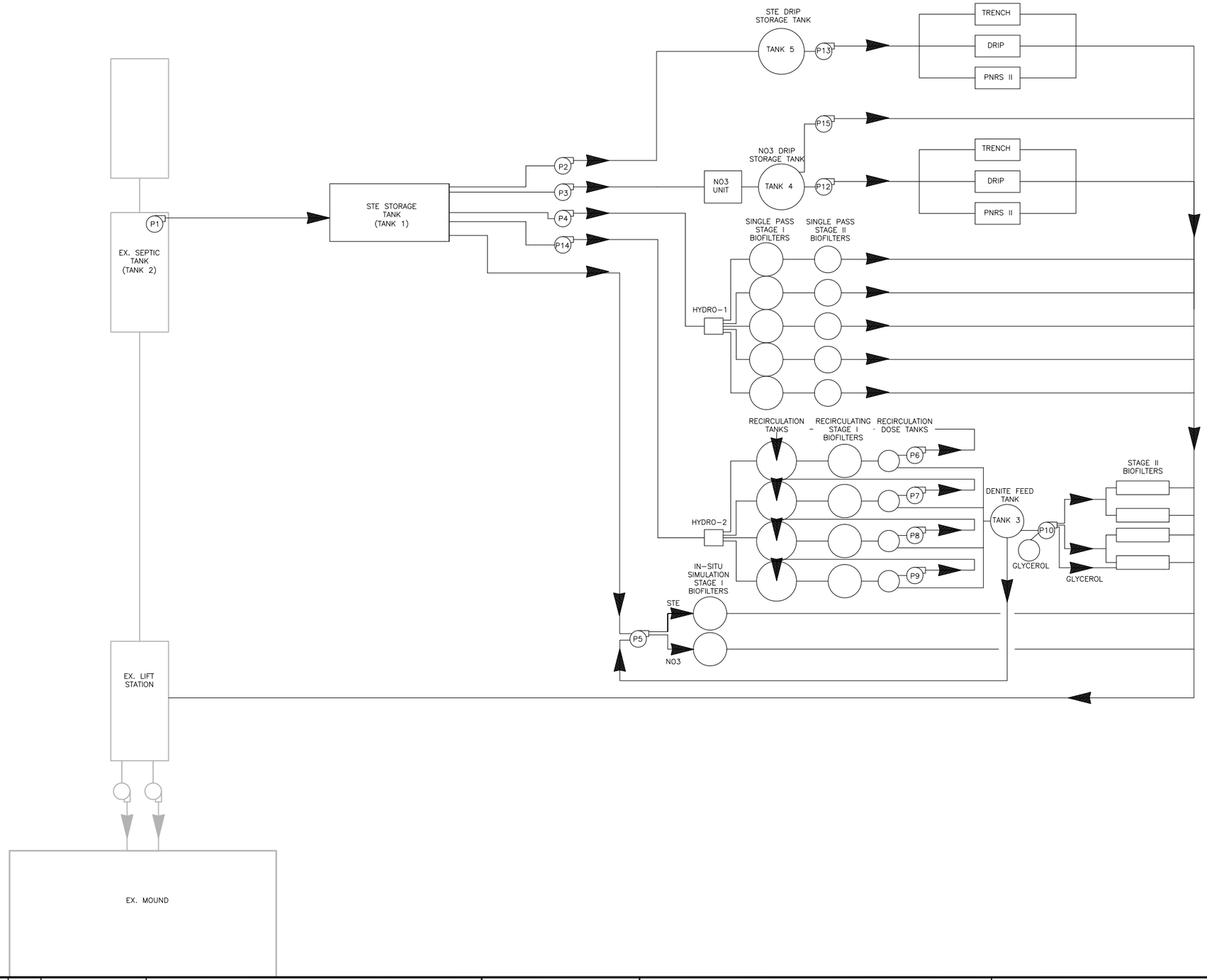

NO.	ISSUED FOR	DATE	BY
4	FINAL SUBMITTAL	01/10	–
3	100% SUBMITTAL	12/09	–
2	75% SUBMITTAL	12/09	–
1	50% SUBMITTAL	08/09	–

DESIGNED JME
DRAWN CMS
CHECKED DBS
PROJ. ENGR. JME
APPROVED DLA

JOSEFIN M. EDEBACK
Name: Date:
Florida Professional Engineer's Registration Number: 69835

HAZEN AND SAWYER
Environmental Engineers & Scientists
10002 Princess Palm Avenue
Registry One Building, Suite 200
Tampa, Florida 33619
Certificate of Authorization Number: 2771

FLORIDA DEPARTMENT OF HEALTH
4052 BALD CYPRESS WAY, BIN A08
TALLAHASSEE, FL 32399-1713
(850)-245-4070

FLORIDA DEPARTMENT OF HEALTH
FLORIDA ONSITE SEWAGE NITROGEN REDUCTION STRATIGIES STUDY

PROCESS FLOW DIAGRAM

THE SCALE BAR SHOWN BELOW MEASURES ONE INCH LONG ON THE ORIGINAL DRAWING.

DATE FEBRUARY 2010
H & S JOB NUMBER 44237-001
CONTRACT NUMBER
DRAWING NUMBER C-3

PLOT DATE: 3/4/2010 9:36 AM BY: EDEBACK

File = G:\44237-000-Ipw\44237-001\Drawings\Cont design - c.STC-C-IV-C-3 PROCESS FLOW DIAGRAM.Dwg by jedeback Save date = 3/4/2010 8:54 AM

CONDITION	FLOW	A TANK 2	B RECIRCULATION TANK	C DOSE TANK	D STAGE 2 DOSE TANK
AVERAGE FLOW	58.8 GPD	130.37	133.38	129.96	129.83

PNRS II TWO-STAGE BIOFILTER WITH RECYCLE

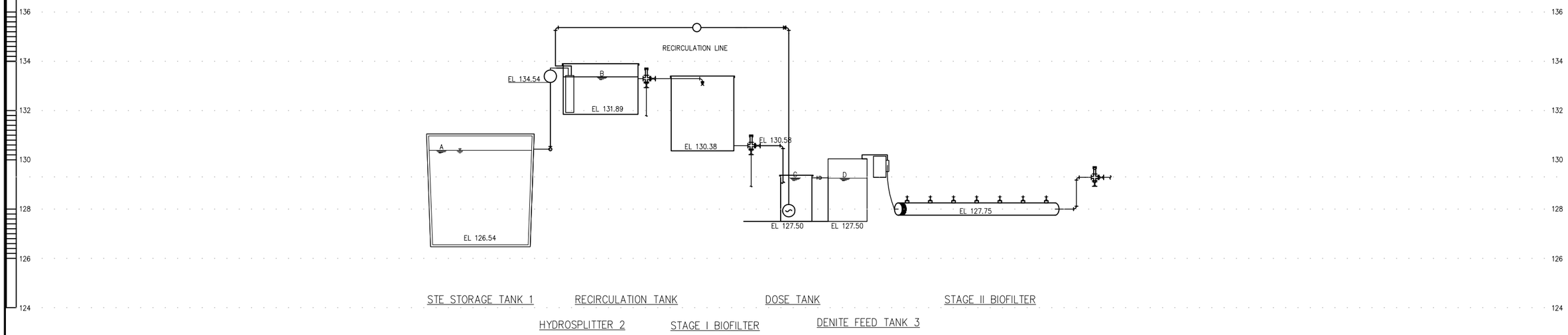

CONDITION	FLOW	A TANK 2	B STAGE 2 TANK
AVERAGE FLOW	73.5 GPD	130.37	130.12

PNRS II TWO-STAGE BIOFILTER SINGLE PASS

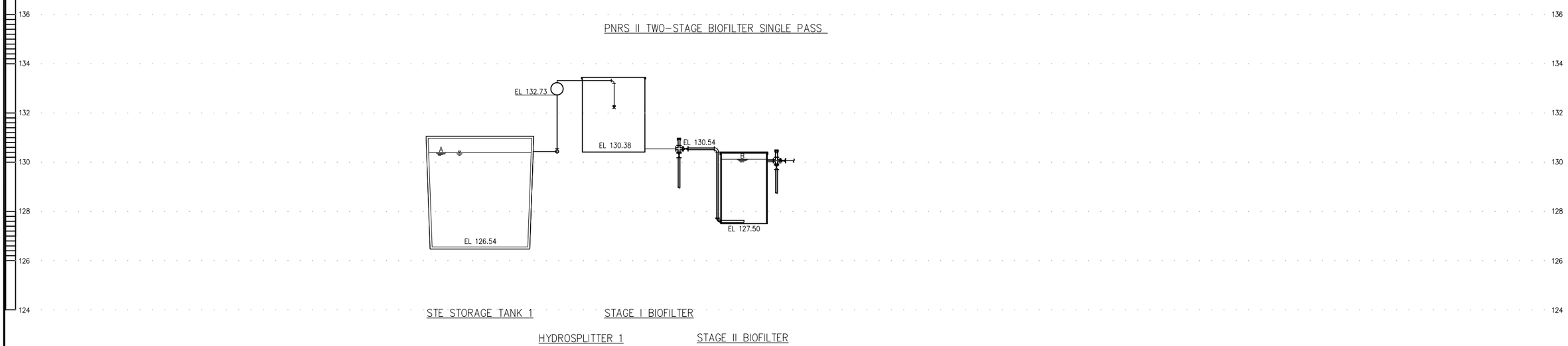

NO.	ISSUED FOR	DATE	BY
4	FINAL SUBMITTAL	01/10	–
3	100% SUBMITTAL	12/09	–
2	75% SUBMITTAL	12/09	–
1	50% SUBMITTAL	08/09	–

DESIGNED DPS
DRAWN CMS
CHECKED DBS
PROJ. ENGR. JME
APPROVED DLA

JOSEFIN M. EDEBACK
Name: Date:
Florida Professional Engineer's Registration Number: 69835

HAZEN AND SAWYER
Environmental Engineers & Scientists
10002 Princess Palm Avenue
Registry One Building, Suite 200
Tampa, Florida 33619
Certificate of Authorization Number: 2771

FLORIDA DEPARTMENT OF HEALTH
4052 BALD CYPRESS WAY, BIN A08
TALLAHASSEE, FL 32399-1713
(850)-245-4070

FLORIDA DEPARTMENT OF HEALTH
FLORIDA ONSITE SEWAGE NITROGEN REDUCTION STRATIGIES STUDY

HYDRAULIC PROFILE PNRS II

THE SCALE BAR SHOWN BELOW MEASURES ONE INCH LONG ON THE ORIGINAL DRAWING.

DATE FEBRUARY 2010
H & S JOB NUMBER 44237-001
CONTRACT NUMBER
DRAWING NUMBER C-4

PLOT DATE: 3/4/2010 9:36 AM BY: JEDEBACK

File = G:\44237-000-Ipw\44237-001\Drawings\Cad drawings - C.STD\C-4 HYDRAULIC PROFILE.Dwg by jedeback. Save date = 3/4/2010 9:05 AM

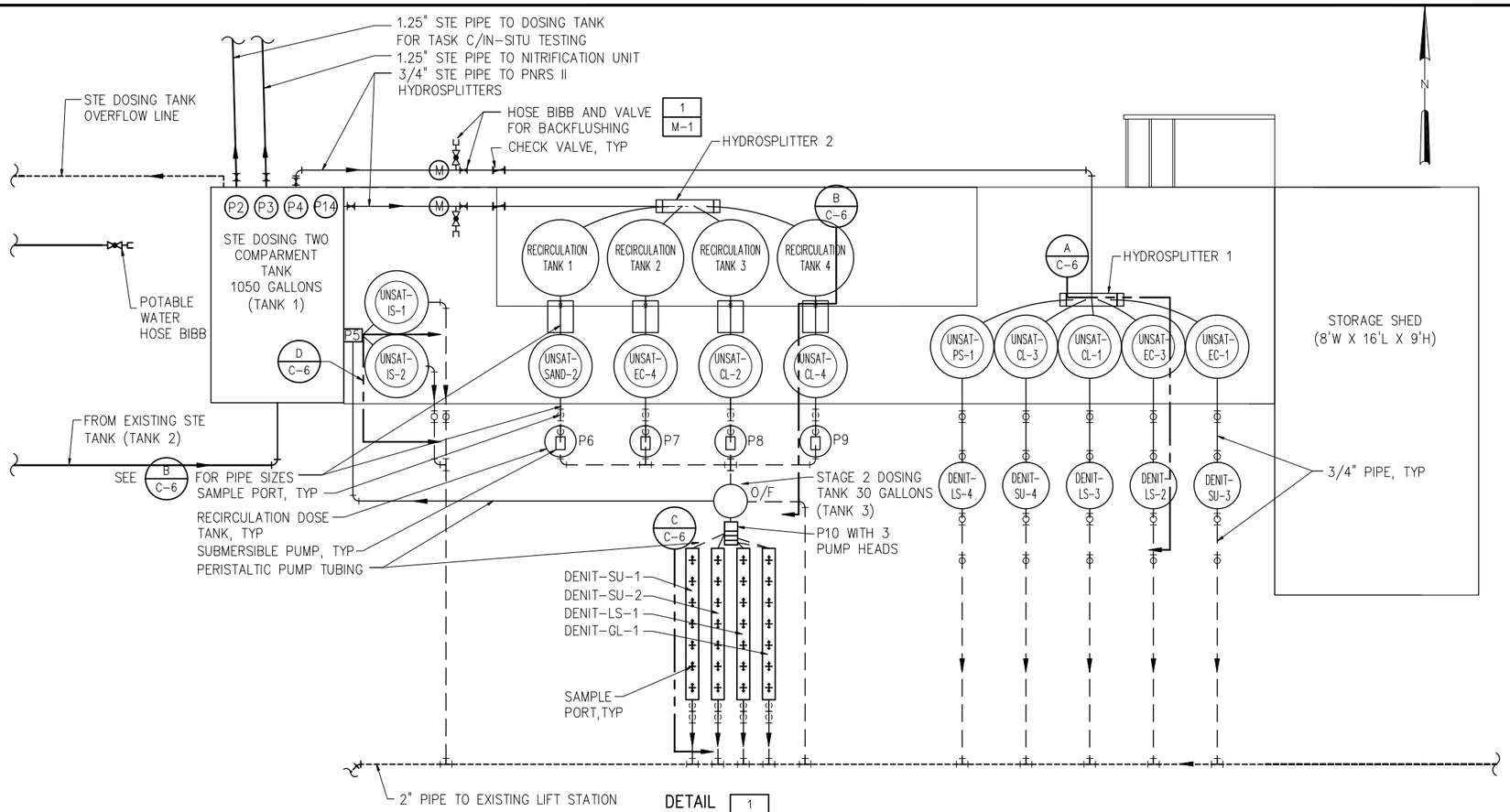

DETAIL 1
3/8"=1'-0" C-2

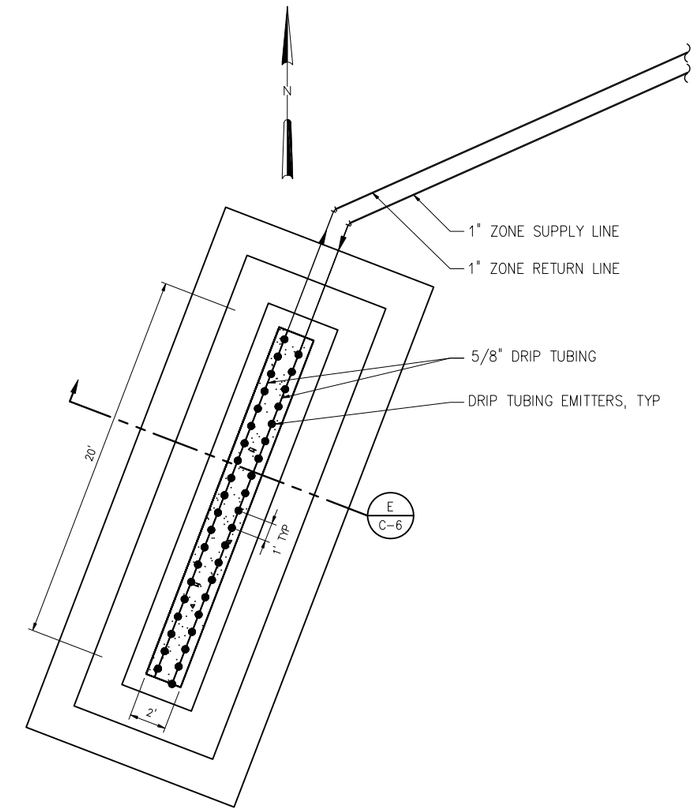

PNRS II IN-SITU SIMULATOR

DETAIL 2
3/8"=1'-0" C-2

SUMMARY OF PNRS II BIOFILTERS

		BIOFILTER	TANK SIZE	MEDIA DEPTH	INITIAL SURFACE LOADING RATE	INITIAL DOSE CYCLES	STAGE II BIOFILTER DIRECTLY CONNECTED
STAGE I BIOFILTER	(SINGLE PASS)	UNSAT-EC-1	30"ID X 36" H	15" EXPANDED CLAY	3 gal/day-ft2; 14.73 gpd	24	DENIT-SU-3
		UNSAT-EC-3	30"ID X 36" H	30" EXPANDED CLAY	3 gal/day-ft2; 14.73 gpd	24	DENIT-LS-2
		UNSAT-CL-1	30"ID X 36" H	15" CLINOPTILOLITE	3 gal/day-ft2; 14.73 gpd	24	DENIT-LS-3
		UNSAT-CL-3	30"ID X 36" H	30" CLINOPTILOLITE	3 gal/day-ft2; 14.73 gpd	24	DENIT-SU-4
		UNSAT-PS-1	30"ID X 36" H	30" POLYSTYRENE	3 gal/day-ft2; 14.73 gpd	24	DENIT-LS-4
		UNSAT-IS-1	30"ID X 36" H	24" MIX	0.8 gal/day-ft2; 3.92 gpd	6	
		UNSAT-IS-2	30"ID X 36" H	24" MIX	0.8 gal/day-ft2; 3.92 gpd	6	
	(WITH RECYCLE)	UNSAT-SAND-2	30"ID X 36" H	30" SAND	3 gal/day-ft2; 14.73 gpd	24	
		UNSAT-EC-4	30"ID X 36" H	30" EXPANDED CLAY	3 gal/day-ft2; 14.73 gpd	24	
		UNSAT-CL-2	30"ID X 36" H	15" CLINOPTILOLITE	3 gal/day-ft2; 14.73 gpd	24	
		UNSAT-CL-4	30"ID X 36" H	30" CLINOPTILOLITE	3 gal/day-ft2; 14.73 gpd	24	
STAGE II BIOFILTER	(CONNECTED)	DENIT-SU-3	22"ID X 34" H	80% SU; 20% OS	4.7 gal/day-ft2; 12.41 gpd	CONTINUOUS	
		DENIT-SU-4	22"ID X 34" H	80% SU; 20% NS	4.7 gal/day-ft2; 12.41 gpd	CONTINUOUS	
		DENIT-LS-2	22"ID X 34" H	50% LS; 50% EC	4.7 gal/day-ft2; 12.41 gpd	CONTINUOUS	
		DENIT-LS-3	22"ID X 34" H	50% LS; 50% SAND	4.7 gal/day-ft2; 12.41 gpd	CONTINUOUS	
		DENIT-LS-4	22"ID X 34" H	30% LS; 70% EC	4.7 gal/day-ft2; 12.41 gpd	CONTINUOUS	
	(COMMON TANK)	DENIT-SU-1	6"ID X 72" L	80% SU; 20% OS	10 gal/day-ft2; 1.96 gpd	24	
		DENIT-SU-2	6"ID X 72" L	80% SU; 20% NS	10 gal/day-ft2; 1.96 gpd	24	
		DENIT-LS-1	6"ID X 72" L	50% LS; 50% EC	10 gal/day-ft2; 1.96 gpd	24	
		DENIT-GL-1	6"ID X 72" L	83% EC; 17% GR	10 gal/day-ft2; 1.96 gpd	24	

SU: ELEMENTAL SULFUR, LS: LIGNOCELLULOSIC, GL: GLYCEROL, OS: OYSTER SHELL, NS: SODIUM SESQUICARBONATE, EC: EXPANDED CLAY

3/8"=1'-0" 12" 0 1 2 4'

NO.	ISSUED FOR	DATE	BY
4	FINAL SUBMITTAL	01/10	–
3	100% SUBMITTAL	12/09	–
2	75% SUBMITTAL	12/09	–
1	50% SUBMITTAL	08/09	–

DESIGNED DPS
DRAWN CMS
CHECKED DBS
PROJ. ENGR. JME
APPROVED DLA

JOSEFIN M. EDEBACK
Name: Date:
Florida Professional Engineer's Registration Number: 69835

HAZEN AND SAWYER
Environmental Engineers & Scientists
10002 Princess Palm Avenue
Registry One Building, Suite 200
Tampa, Florida 33619
Certificate of Authorization Number: 2771

FLORIDA DEPARTMENT OF HEALTH
4052 BALD CYPRESS WAY, BIN A08
TALLAHASSEE, FL 32399-1713
(850)-245-4070

FLORIDA DEPARTMENT OF HEALTH
FLORIDA ONSITE SEWAGE NITROGEN REDUCTION STRATIGIES STUDY

PNRS II DETAILS

THE SCALE BAR SHOWN BELOW MEASURES ONE INCH LONG ON THE ORIGINAL DRAWING.

DATE FEBRUARY 2010
H & S JOB NUMBER 44237-001
CONTRACT NUMBER
DRAWING NUMBER C-5

PLOT DATE: 3/4/2010 9:36 AM BY: JEDEBACK

File = Q:\44237-001-tpo\44237-001\Drawings\final design - c-13\Cad\C-3 PNRS II OVERVIEW-SITE PLAN Saved by jedeback Save date = 3/4/2010 9:31 AM

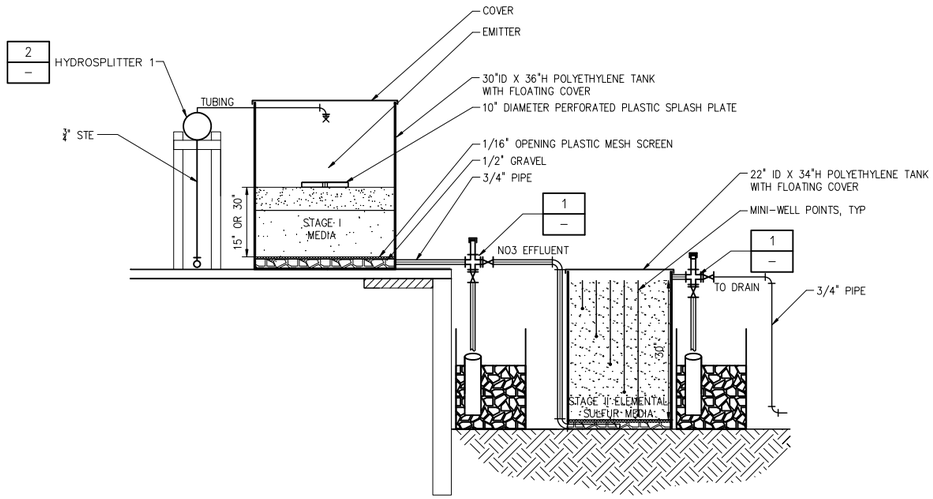

PNRS II TWO-STAGE BIOFILTER SINGLE PASS (TYPICAL)

SECTION A / C-5
NTS

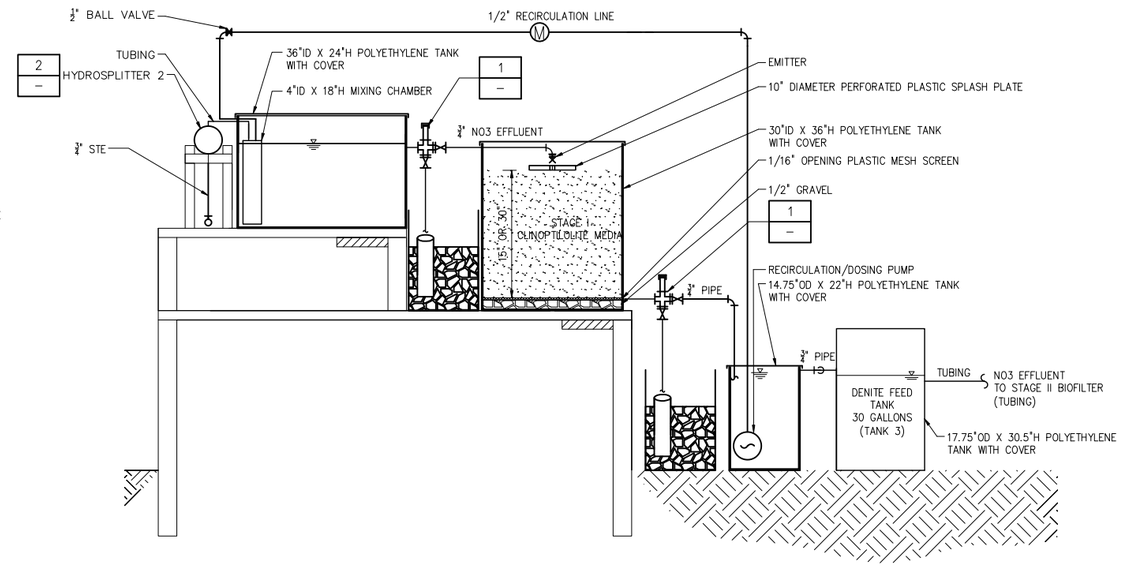

PNRS II TWO-STAGE BIOFILTER WITH RECYCLE (TYPICAL)

SECTION B / C-5
NTS

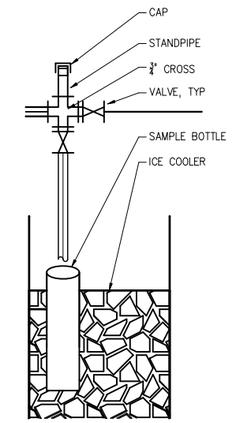

TYPICAL SAMPLE PORT

DETAIL 1 / –
NTS

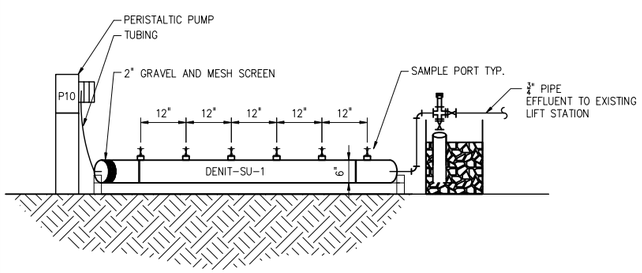

PNRS II STAGE II BIOFILTER FED FROM TANK 3

SECTION C / C-5
NTS

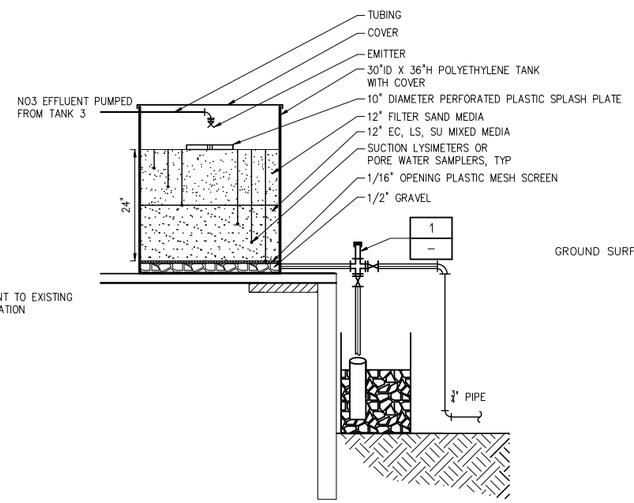

PNRS II STAGE I IN-SITU BIOFILTER SIMULATOR

SECTION D / C-5
NTS

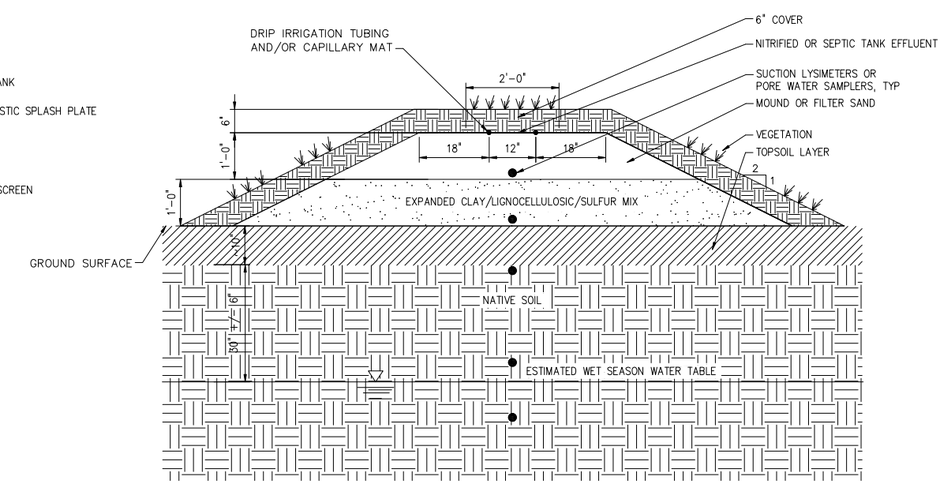

PNRS II INSITU SYTEM

SECTION E / C-5
NTS

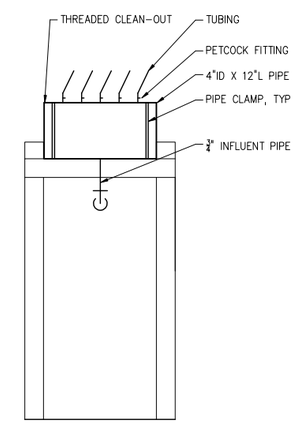

HYDROSPLITTER

DETAIL 2 / –
NTS

NO.	ISSUED FOR	DATE	BY
4	FINAL SUBMITTAL	01/10	–
3	100% SUBMITTAL	12/09	–
2	75% SUBMITTAL	12/09	–
1	50% SUBMITTAL	08/09	–

DESIGNED DPS
DRAWN CMS
CHECKED DBS
PROJ. ENGR. JME
APPROVED DLA

JOSEFIN M. EDEBACK
Name: Date:
Florida Professional Engineer's Registration Number: 69835

HAZEN AND SAWYER
Environmental Engineers & Scientists
10002 Princess Palm Avenue
Registry One Building, Suite 200
Tampa, Florida 33619
Certificate of Authorization Number: 2771

FLORIDA DEPARTMENT OF HEALTH
4052 BALD CYPRESS WAY, BIN A08
TALLAHASSEE, FL 32399-1713
(850)-245-4070

FLORIDA DEPARTMENT OF HEALTH
FLORIDA ONSITE SEWAGE NITROGEN REDUCTION STRATIGIES STUDY

PNRS II DETAILS

THE SCALE BAR SHOWN BELOW MEASURES ONE INCH LONG ON THE ORIGINAL DRAWING.

DATE FEBRUARY 2010
H & S JOB NUMBER 44237-001
CONTRACT NUMBER
DRAWING NUMBER C-6

PLOT DATE: 3/4/2010 9:37 AM BY: JEDEBACK
File = G:\44237-001-fpd\44237-001\drawings\final design - c.5\C-5-A-C-6 PNRS II DETAILS Saved by jedeback Save date = 3/4/2010 9:12 AM

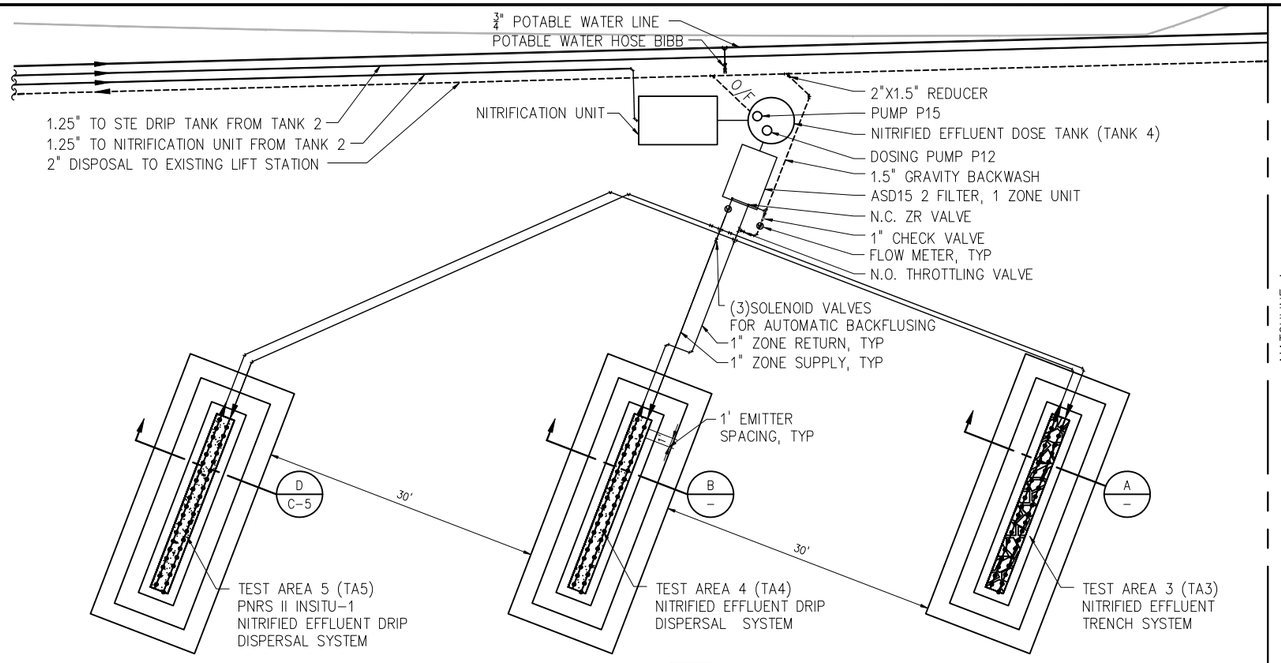

DETAIL 3 / C-2
NTS

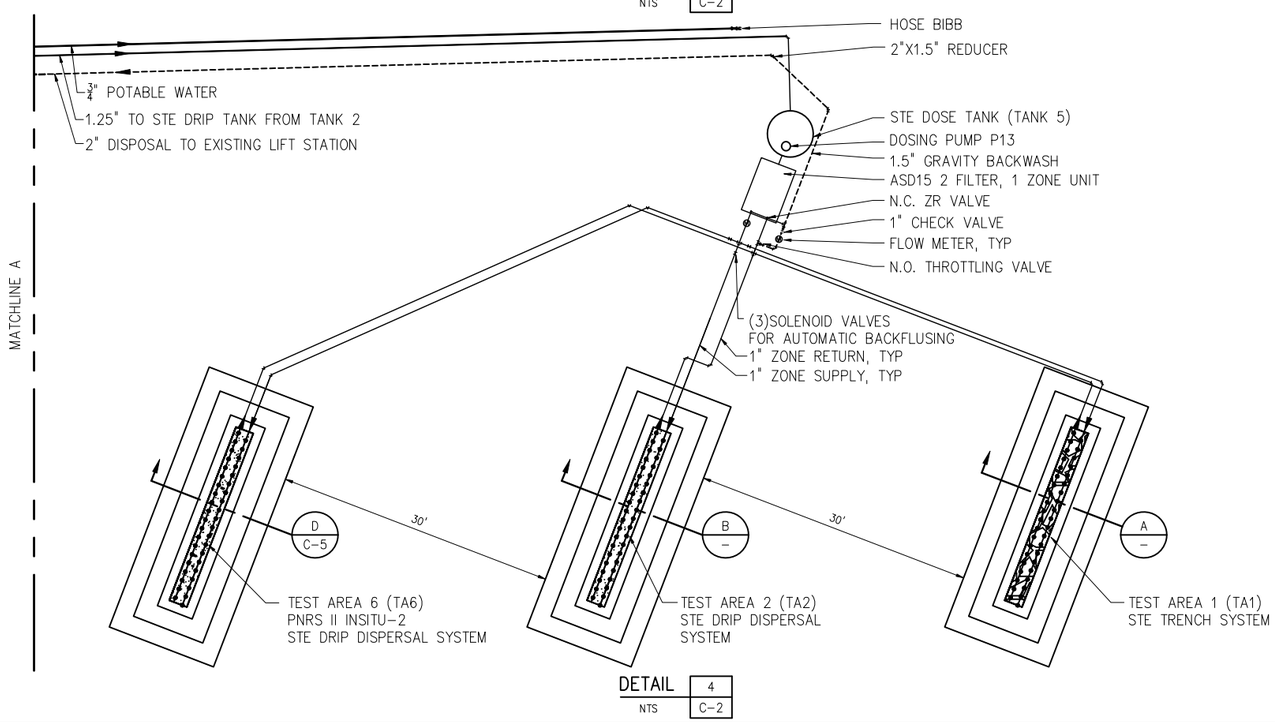

DETAIL 4 / C-2
NTS

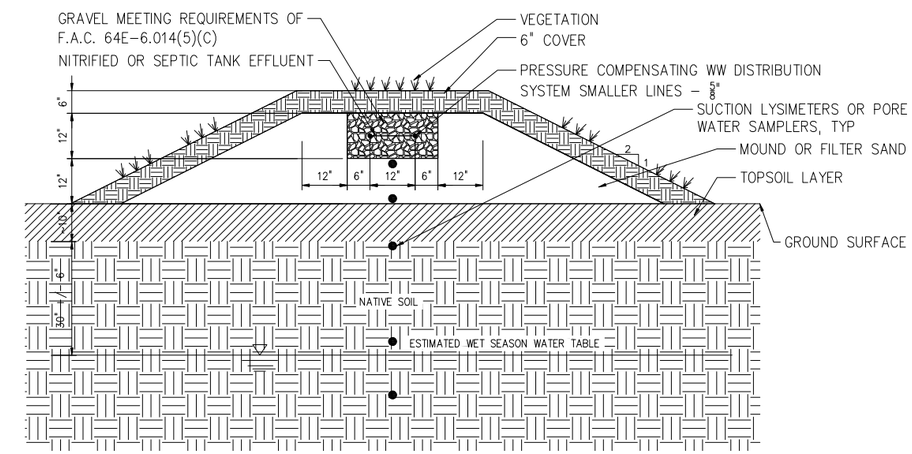

SECTION A / -
NTS

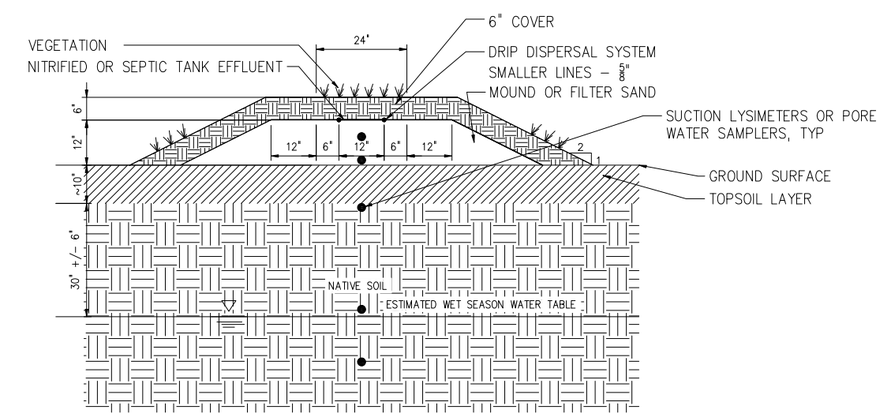

SECTION B / -
NTS

NOTES

1. PROPOSED NITRIFICATION UNIT AT THIS FACILITY REFERS TO A MANUFACTURED WASTEWATER TREATMENT SYSTEM WHICH MAY UTILIZE SPECIAL EQUIPMENT AND MATERIALS SUPPLIED AS A SINGLE PACKAGE WHERE INDICATED. THIS SYSTEM WILL BE PROVIDED BY OTHERS.
2. TWO PERC-RITE DRIP DISPERSAL SYSTEMS WITH THREE ZONES EACH SHALL BE PROVIDED AS INDICATED. THE SYSTEMS SHALL INCLUDE A PRESSURE REGULATOR AND FLOW METER ON THE RETURN LINE. THE INSTALLATION OF THIS SYSTEM SHALL BE IN ACCORDANCE WITH SPECIFICATIONS AND PROCEDURES AS SUPPLIED BY THE MANUFACTURER OF THE EQUIPMENT.
3. THE DRIP TUBING SHALL BE INSTALLED USING A VIBRATORY PLOW OR TRENCHER. INSTALL ALL TUBING ALONG CONTOUR.
4. ALL PVC PIPING AND FITTINGS SHALL BE PVC SCH 40 TYPE 1 RATED FOR PRESSURE APPLICATIONS. ALL GLUED JOINTS SHALL BE CLEANED AND PRIMED WITH PURPLE (DYED) PVC PRIMER PRIOR TO BEING GLUED.
5. ALL CUTTING OF PVC PIPE, FLEXIBLE PVC AND DRIPPER TUBING OF SIZE 1.5" OR SMALLER SHALL BE ACCOMPLISHED WITH PIPE CUTTERS APPROVED BY AMERICAN MANUFACTURING COMPANY, INC. NO SAWING OF PVC, FLEXIBLE PVC, OR DRIPPER TUBING OF SIZE 1.5" OR SMALLER IS ALLOWED.
6. ALL PVC PIPE, FLEXIBLE PVC AND DRIPPER TUBING IN THE WORK AREA SHALL HAVE THE ENDS COVERED WITH DUCT TAPE TO PREVENT CONSTRUCTION DEBRIS FROM ENTERING THE PIPE. PRIOR TO GLUING, ALL JOINTS SHALL BE INSPECTED FOR AND CLEARED OF ANY CONSTRUCTION DEBRIS.
7. ALL AUTOMATIC VALVES (ZONE VALVES & FIELD FLUSH RETURN VALVES) SHALL BE INSTALLED WITH ISOLATION VALVES, BYPASS VALVES, AND DISCONNECTS (I.E. UNIONS, FLANGES) FOR MANUAL FIELD OPERATION DURING FIELD MAINTENANCE EVENTS. ALL VALVES MUST BE PROVIDED WITH AT-GRADE ACCESS.
8. NO ACTIVITY ON DRAINFIELD AREA OTHER THAN MINIMUM IS REQUIRED TO INSTALL SYSTEMS. DO NOT PARK EQUIPMENT, DRIVE LARGE EQUIPMENT OVER OR STORE MATERIALS ON DRAINFIELD AREAS.
9. NO WET WEATHER INSTALLATION IS PERMITTED.
10. ALL FORCE MAINS SHALL BE TESTED FOR LEAKS PRIOR TO DRIP TUBING INSTALLATION AND PRIOR TO SYSTEM STARTUP. UNCOVERED FORCE MAINS SHALL BE VISIBLY INSPECTED FOR LEAKS. IF A LEAK IS SUSPECTED IN COVERED FORCE MAINS THEN THE FORCE MAIN SHALL BE RE-TESTED AT A MINIMUM PRESSURE OF AT LEAST 50 PERCENT ABOVE THE DESIGN OPERATING PRESSURE, FOR AT LEAST 30 MINUTES. THERE SHALL BE NO DISCERNIBLE LEAKAGE.
11. THE CONTRACTOR IS ADVISED THAT THE NITRIFICATION UNIT AND DRIP DISPERSAL SYSTEMS AND POSSIBLY OTHER DONATED EQUIPMENT WILL BE DELIVERED AND STORED AT THE PROJECT SITE. EXCEPT WHERE INDICATED IN CONTRACT DOCUMENTS ALL SHIPMENTS WILL BE ARRANGED BY FDOH AND THE ENGINEER. MANUFACTURER'S REPRESENTATIVES WILL BE AVAILABLE FOR TECHNICAL GUIDANCE AT THE TIME OF INSTALLATION.

NO.	ISSUED FOR	DATE	BY
4	FINAL SUBMITTAL	01/10	-
3	100% SUBMITTAL	12/09	-
2	75% SUBMITTAL	12/09	-
1	50% SUBMITTAL	08/09	-

DESIGNED KSL
DRAWN CMS
CHECKED DBS
PROJ. ENGR. JME
DLA
APPROVED

JOSEFIN M. EDEBACK
Name: Date:
Florida Professional Engineer's Registration Number: 69835

HAZEN AND SAWYER
Environmental Engineers & Scientists
10002 Princess Palm Avenue
Registry One Building, Suite 200
Tampa, Florida 33619
Certificate of Authorization Number: 2771

FLORIDA DEPARTMENT OF HEALTH
4052 BALD CYPRESS WAY, BIN A08
TALLAHASSEE, FL 32399-1713
(850)-245-4070

FLORIDA DEPARTMENT OF HEALTH
FLORIDA ONSITE SEWAGE NITROGEN REDUCTION STRATIGIES STUDY

TASK C NITROGEN FATE & TRANSPORT STUDY & PNRS II IN-SITU SYSTEMS

THE SCALE BAR SHOWN BELOW MEASURES ONE INCH LONG ON THE ORIGINAL DRAWING.

DATE FEBRUARY 2010
H & S JOB NUMBER 44237-001
CONTRACT NUMBER
DRAWING NUMBER C-7

PLOT DATE: 3/4/2010 9:37 AM BY: JEDEBACK
File = Q:\44237-001-Ipw\44237-001\Drawings\final design - c13\CadCp-7 TASK C NITROGEN FATE & TRANSPORT STUDY OVERVIEW-SITE PLAN Saved by jedeback Save date = 3/4/2010 9:14 AM

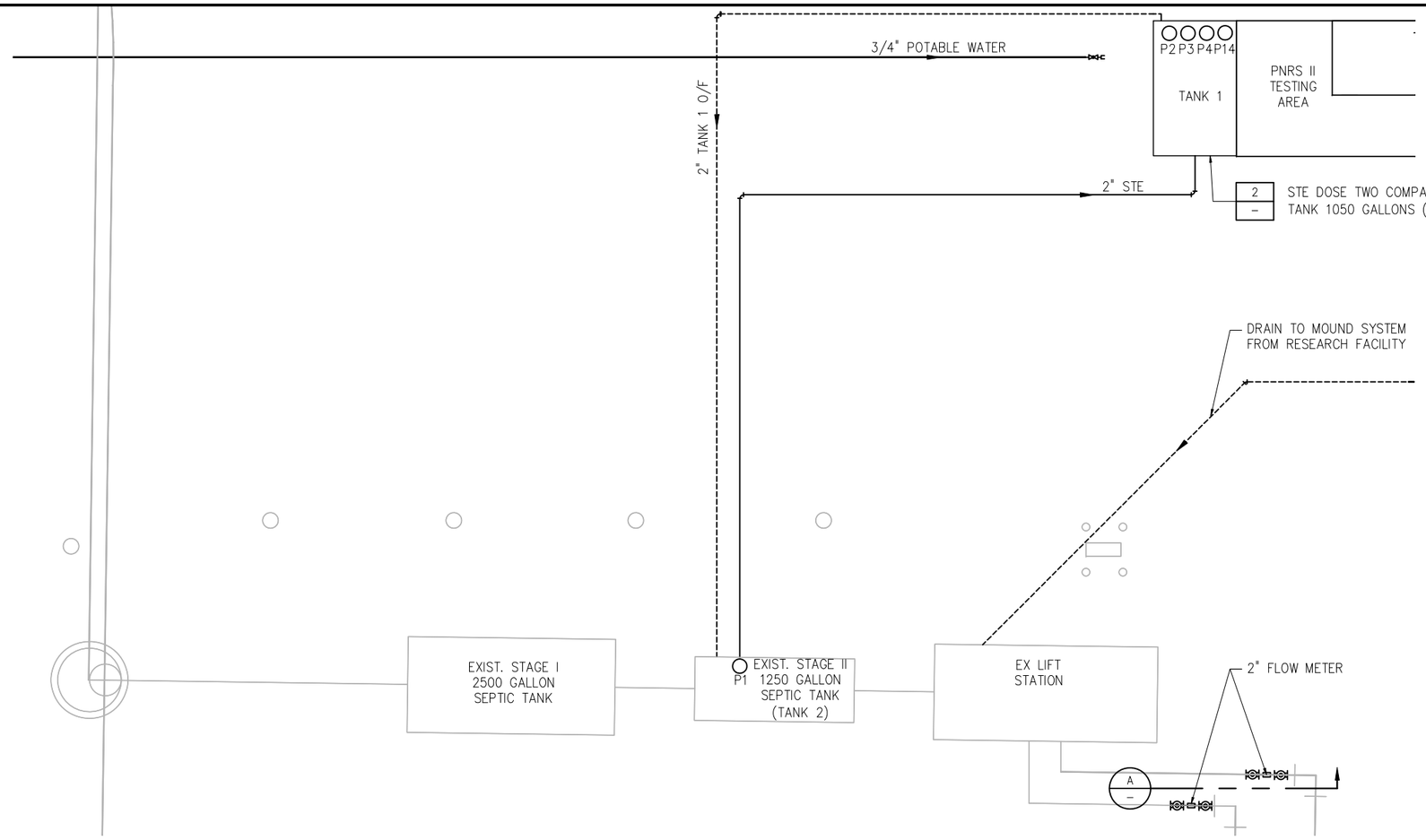

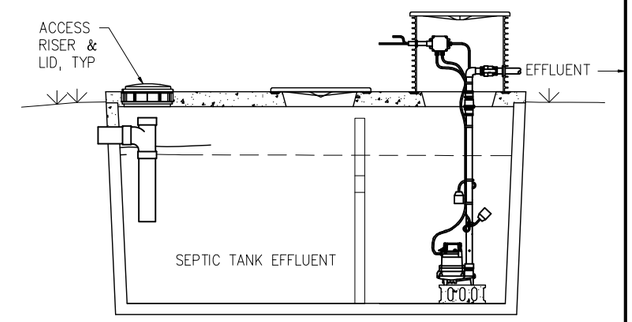

TANK 2

DETAIL 2 / –

NTS

DETAIL 5 / C–2

NTS

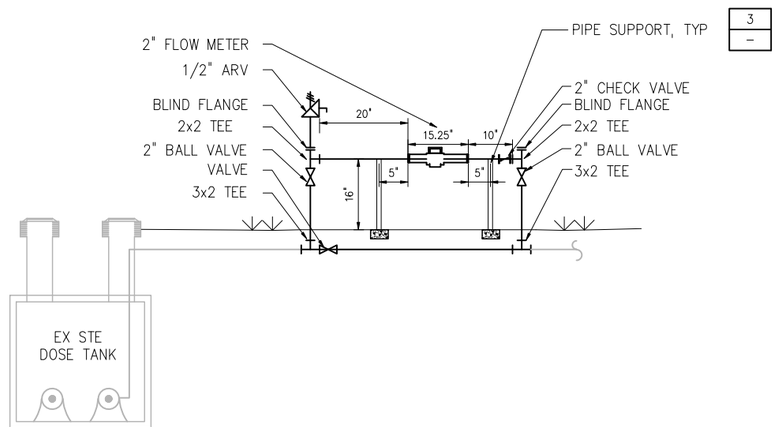

SECTION A / –

NTS

3 / –

NOTES:

1. PROVIDE HALF ROUND RIGID INSULATION & INSULATION PROTECTION SHIELD, SIMILAR TO ANVIL FIG.167 OR COOPER B-LINE B3151 WHEN PIPING IS INSULATED.
2. PROVIDE NEOPRENE WAFFLE ISOLATION PAD SIMILAR TO MASON TYPE "W" OR KORFUND KORPAD 40, UNDER SUPPORT FOOT WHEN PIPING IS TO BE ISOLATED OR FIRST SUPPORT ADJACENT TO MECHANICAL EQUIPMENT.
3. FOR BASE, HEIGHT, & FLANGE DIMENSIONS, SEE TABLE TO RIGHT.
4. SST=TYPE 316

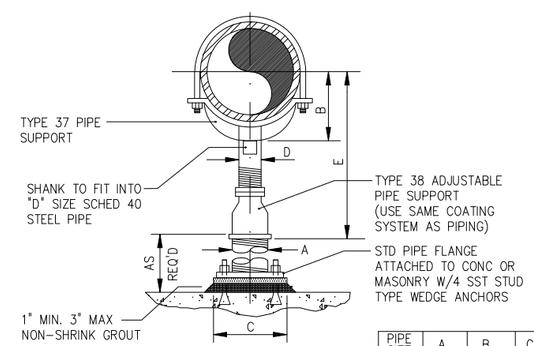

PIPE SUPPORT

N.T.S.

DETAIL 3 / STD

NTS

PIPE SIZE	A	B	C	D	E MIN.	E MAX.
2	2-1/2	3-1/4	9	1-1/2	7 -3/4	12-3/4
2-1/2	2-1/2	3-1/2	9	1-1/2	8	13
3	2-1/2	3-3/4	9	1-1/2	8-1/4	13-1/4
3-1/2	2-1/2	4	9	1-1/2	8-1/2	13-1/2
4	3	4-1/4	9	2-1/2	9-1/4	14

NO.	ISSUED FOR	DATE	BY
4	FINAL SUBMITTAL	01/10	–
3	100% SUBMITTAL	12/09	–
2	75% SUBMITTAL	12/09	–
1	50% SUBMITTAL	08/09	–

DESIGNED JME
DRAWN CMS
CHECKED DBS
PROJ. ENGR. JME
DLA
APPROVED

JOSEFIN M. EDEBACK
Name: Date:
Florida Professional Engineer's Registration Number: 69835

HAZEN AND SAWYER
Environmental Engineers & Scientists
10002 Princess Palm Avenue
Registry One Building, Suite 200
Tampa, Florida 33619
Certificate of Authorization Number: 2771

FLORIDA DEPARTMENT OF HEALTH
4052 BALD CYPRESS WAY, BIN A08
TALLAHASSEE, FL 32399-1713
(850)-245-4070

FLORIDA DEPARTMENT OF HEALTH
FLORIDA ONSITE SEWAGE NITROGEN REDUCTION STRATIGIES STUDY

WASTEWATER SOURCE COMPONENTS DETAILS

THE SCALE BAR SHOWN BELOW MEASURES ONE INCH LONG ON THE ORIGINAL DRAWING.

DATE FEBRUARY 2010
H & S JOB NUMBER 44237-001
CONTRACT NUMBER
DRAWING NUMBER C-8

PLOT DATE: 3/4/2010 8:37 AM BY: JEDEBACK

File = G:\44237-001-Gen\44237-001\Drawings\Cont design - c15\Cont-C-8 100% C DETAILS.Dwg\ by jedeback Save date = 3/4/2010 8:22 AM

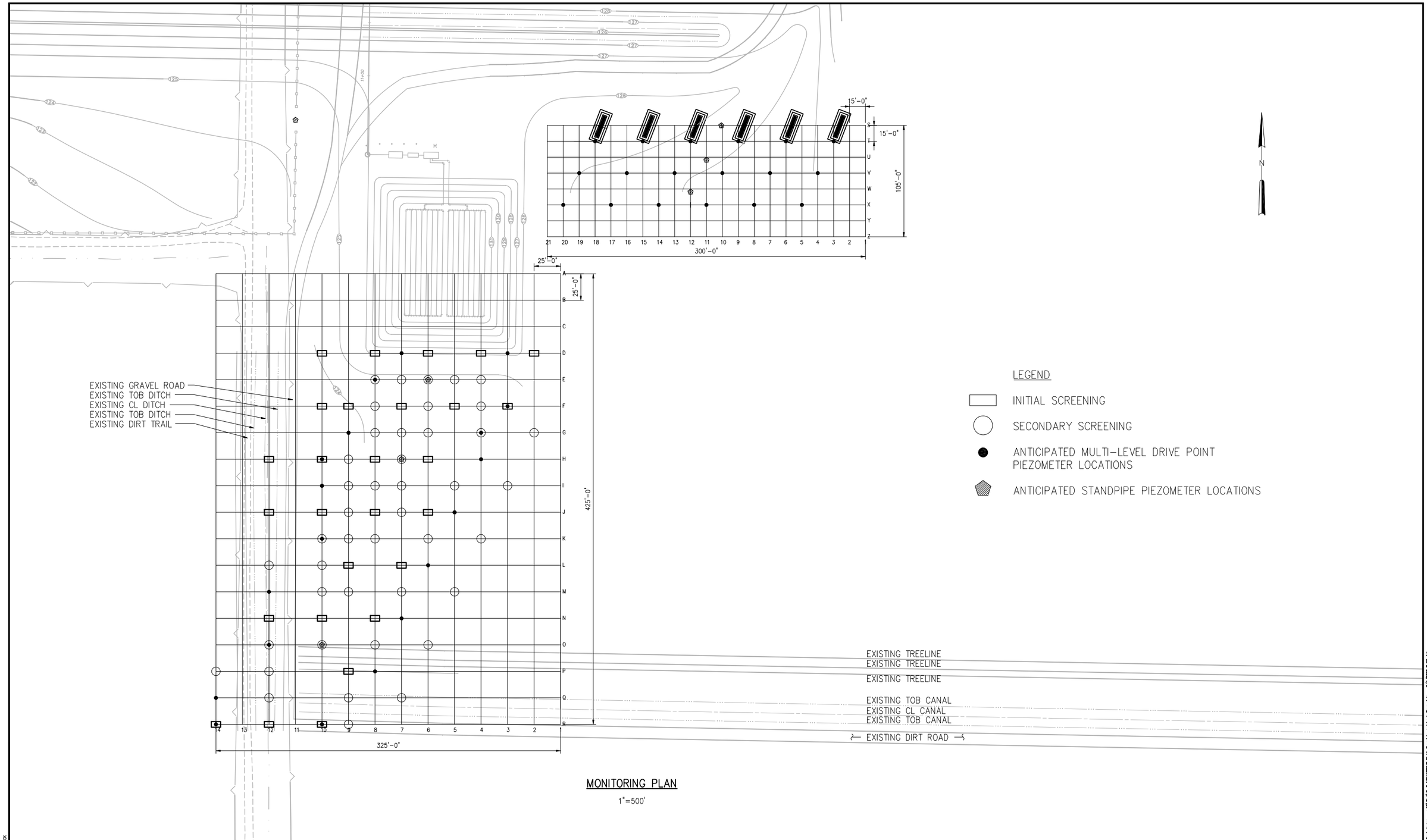

MONITORING PLAN

1"=500'

NO.	ISSUED FOR	DATE	BY
4	FINAL SUBMITTAL	01/10	–
3	100% SUBMITTAL	12/09	–
2	75% SUBMITTAL	12/09	–
1	50% SUBMITTAL	08/09	–

DESIGNED JME
DRAWN CMS
CHECKED DBS
PROJ. ENGR. JME
DLA
APPROVED

JOSEFIN M. EDEBACK
Name: Date:
Florida Professional Engineer's Registration Number: 69835

HAZEN AND SAWYER
Environmental Engineers & Scientists
10002 Princess Palm Avenue
Registry One Building, Suite 200
Tampa, Florida 33619
Certificate of Authorization Number: 2771

FLORIDA DEPARTMENT OF HEALTH
4052 BALD CYPRESS WAY, BIN A08
TALLAHASSEE, FL 32399-1713
(850)-245-4070

FLORIDA DEPARTMENT OF HEALTH
FLORIDA ONSITE SEWAGE NITROGEN REDUCTION STRATIGIES STUDY

MONITORING PLAN

THE SCALE BAR SHOWN BELOW MEASURES ONE INCH LONG ON THE ORIGINAL DRAWING.

DATE FEBRUARY 2010
H & S JOB NUMBER 44237-001
CONTRACT NUMBER
DRAWING NUMBER C-9

PLOT DATE: 3/4/2010 9:37 AM BY: JEDEBACK

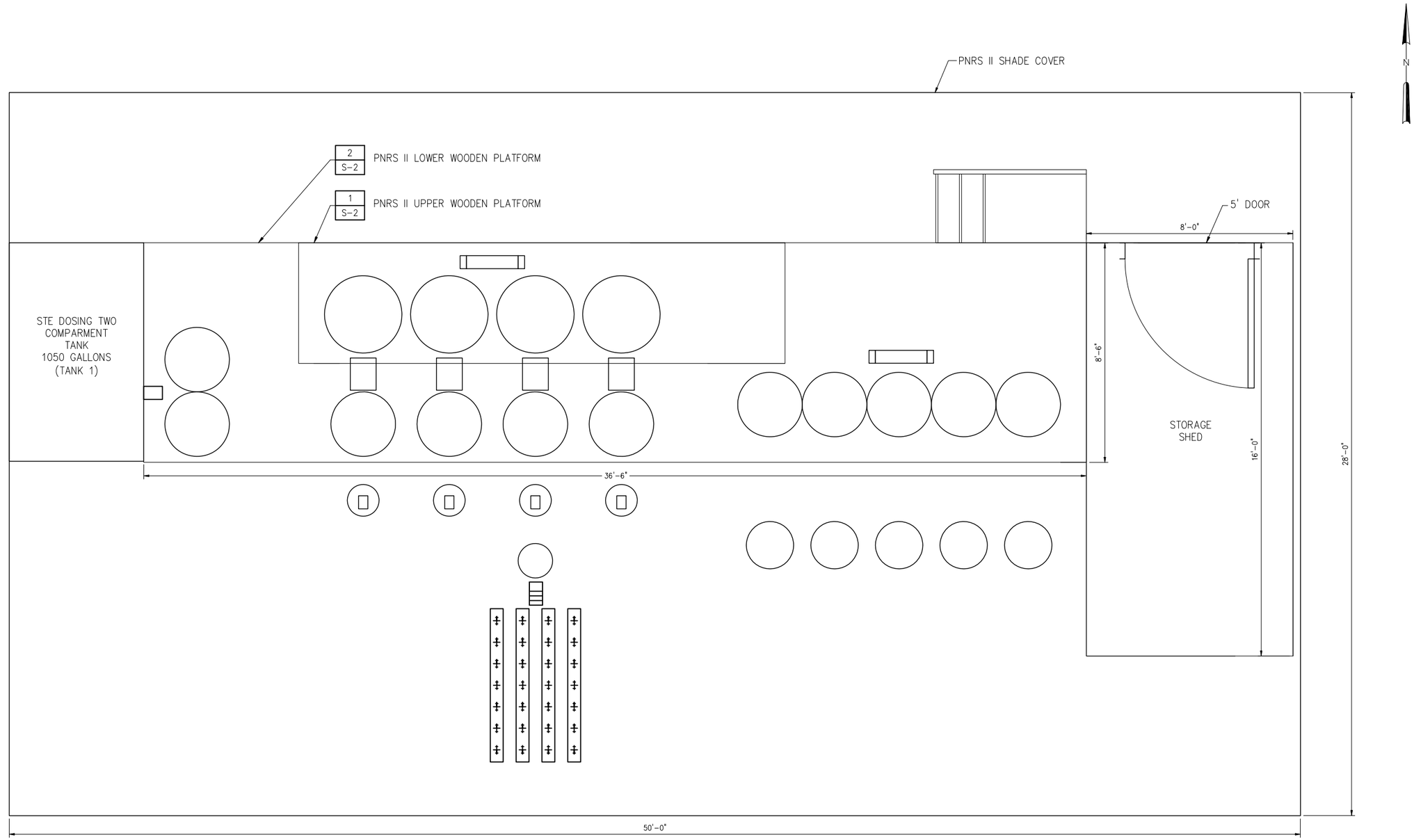

PROPOSED SITE PLAN

1/2"=1'-0"

NO.	ISSUED FOR	DATE	BY
4	FINAL SUBMITTAL	01/10	–
3	100% SUBMITTAL	12/09	–
2	75% SUBMITTAL	12/09	–
1	50% SUBMITTAL	08/09	–

DESIGNED AVF
DRAWN GPB
CHECKED AFH
PROJ. ENGR. SJ
DLA
APPROVED

SHAJAN JOYKUTTY
Name: Date:
Florida Professional Engineer's Registration Number: 43323

HAZEN AND SAWYER
Environmental Engineers & Scientists
10002 Princess Palm Avenue
Registry One Building, Suite 200
Tampa, Florida 33619
Certificate of Authorization Number: 2771

FLORIDA DEPARTMENT OF HEALTH
4052 BALD CYPRESS WAY, BIN A08
TALLAHASSEE, FL 32399-1713
(850)-245-4070

FLORIDA DEPARTMENT OF HEALTH
FLORIDA ONSITE SEWAGE NITROGEN REDUCTION STRATIGIES STUDY

PNRS II STRUCTURAL SITE PLAN

THE SCALE BAR SHOWN BELOW MEASURES ONE INCH LONG ON THE ORIGINAL DRAWING.

DATE FEBRUARY 2010
H & S JOB NUMBER 44237-001
CONTRACT NUMBER
DRAWING NUMBER S-1

PLOT DATE: 3/4/2010 9:38 AM BY: JEDEBACK

File = Q:\44237-000-tpa\44237-001\Drawings\final design - c.13\S-1 PNRS II STRUCTURAL SITE PLAN Saved by jedeback Save date = 3/4/2010 9:26 AM

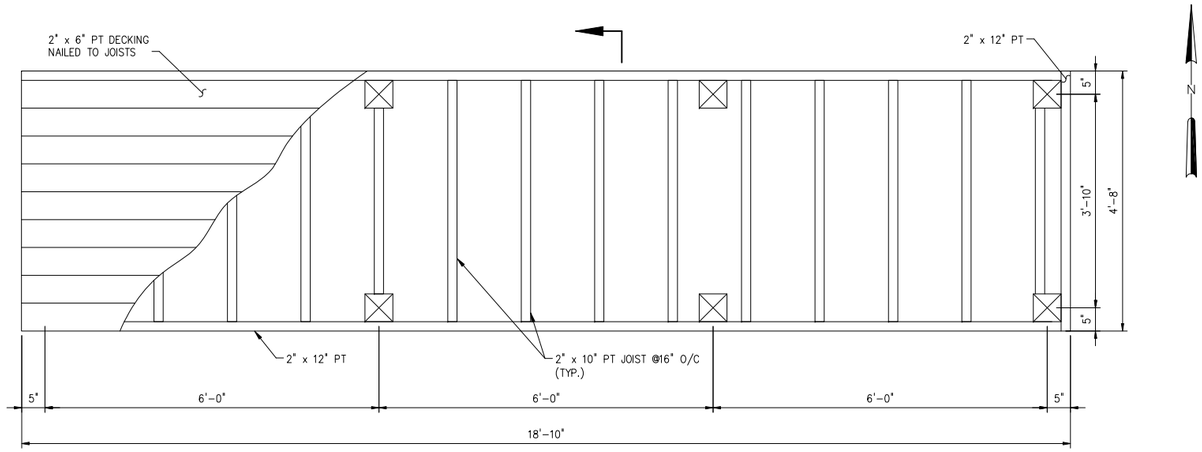

PNRS II UPPER PLAN

DETAIL 1 / S-1

3/4"=1'-0"

G / S-3

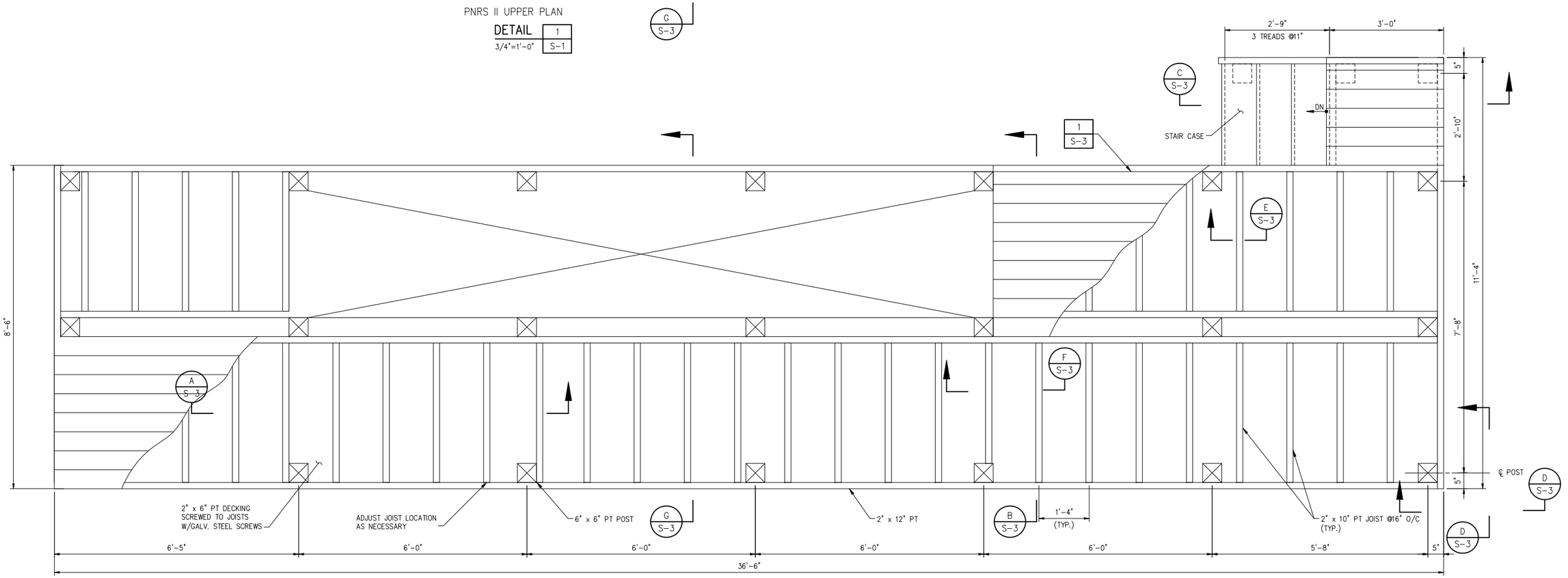

PNRS II PLAN

DETAIL 2 / S-1

3/4"=1'-0"

6" 0 1 2'

NO.	ISSUED FOR	DATE	BY
4	FINAL SUBMITTAL	01/10	–
3	100% SUBMITTAL	12/09	–
2	75% SUBMITTAL	12/09	–
1	50% SUBMITTAL	08/09	–

DESIGNED AVF
DRAWN GPB
CHECKED AFH
PROJ. ENGR. SJ
APPROVED DLA

Name: SHAJAN JOYKUTTY, PE Date:
Florida Professional Engineer's Registration Number: 43323

HAZEN AND SAWYER
Environmental Engineers & Scientists
10002 Princess Palm Avenue
Registry One Building, Suite 200
Tampa, Florida 33619
Certificate of Authorization Number: 2771

FLORIDA DEPARTMENT OF HEALTH
4052 BALD CYPRESS WAY, BIN A08
TALLAHASSEE, FL 32399-1713
(850)-245-4070

FLORIDA DEPARTMENT OF HEALTH
FLORIDA ONSITE SEWAGE NITROGEN REDUCTION STRATIGIES STUDY

PNRS II STRUCTURAL SITE PLAN AND DETAILS

THE SCALE BAR SHOWN BELOW MEASURES ONE INCH LONG ON THE ORIGINAL DRAWING.

DATE FEBRUARY 2010
H & S JOB NUMBER 44237-001
CONTRACT NUMBER
DRAWING NUMBER S-2

PLOT DATE: 3/4/2010 9:38 AM BY: JEDEBACK

File = G:\44237-000-tpa\44237-001\Drawings\Struc design = c:\STGstuccoo\S-2.Dwg by jedeback Save date = 2/16/2010 2:13 PM

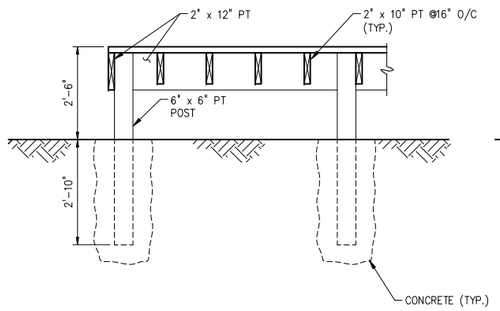

SECTION A
1/2"=1'-0"

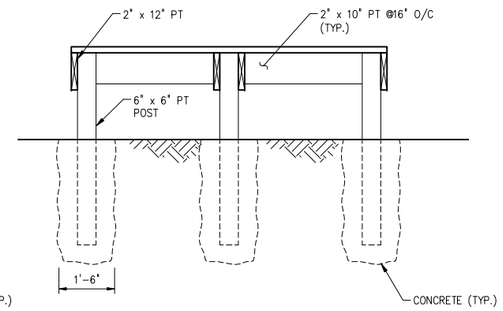

SECTION B
1/2"=1'-0"

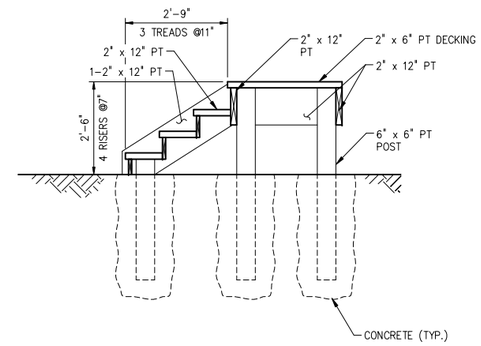

SECTION C
1/2"=1'-0"

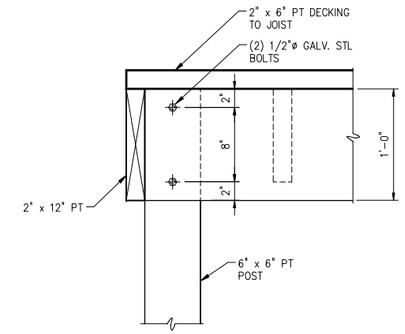

SECTION D
1-1/2"=1'-0"

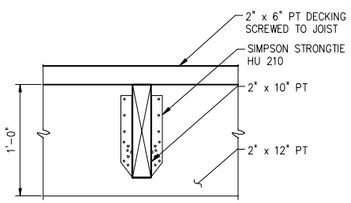

SECTION E
1-1/2"=1'-0"

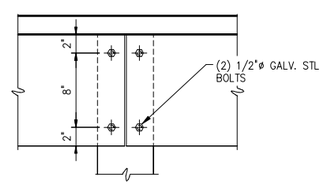

SECTION F
1-1/2"=1'-0"

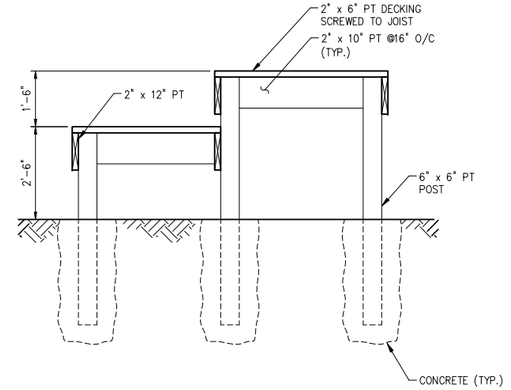

SECTION G
1/2"=1'-0"

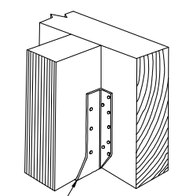

HU 210 JOIST HANGER BY SIMPSON STRONG TIE, FASTEN WITH (8) $\frac{1}{4}$"x 1 $\frac{1}{2}$" LONG AND (6) 10d x 1 $\frac{1}{2}$" LONG NAILS FOR JOIST (N.O.A. #03-0123.05)

DETAIL 1
N.T.S.

1 1/2"=1'-0" 4" 0 1'

1/2"=1'-0" 12" 0 1 3'

NO.	ISSUED FOR	DATE	BY
4	FINAL SUBMITTAL	01/10	–
3	100% SUBMITTAL	12/09	–
2	75% SUBMITTAL	12/09	–
1	50% SUBMITTAL	08/09	–

DESIGNED AVF
DRAWN GPB
CHECKED AFH
PROJ. ENGR. SJ
APPROVED

Name: SHAJAN JOYKUTTY, PE Date:
Florida Professional Engineer's Registration Number: 43323

HAZEN AND SAWYER
Environmental Engineers & Scientists
10002 Princess Palm Avenue
Registry One Building, Suite 200
Tampa, Florida 33619
Certificate of Authorization Number: 2771

FLORIDA DEPARTMENT OF HEALTH
4052 BALD CYPRESS WAY, BIN A08
TALLAHASSEE, FL 32399-1713
(850)-245-4070

FLORIDA DEPARTMENT OF HEALTH
FLORIDA ONSITE SEWAGE NITROGEN REDUCTION STRATIGIES STUDY

PNRS II STRUCTURAL SITE PLAN AND DETAILS

THE SCALE BAR SHOWN BELOW MEASURES ONE INCH LONG ON THE ORIGINAL DRAWING.

DATE FEBRUARY 2010
H & S JOB NUMBER 44237-001
CONTRACT NUMBER
DRAWING NUMBER S-3

PLOT DATE: 3/4/2010 9:38 AM BY: JDEBACK
PLOT DATE: 3/4/2010 9:38 AM BY: JDEBACK
File = G:\44237-000-Ipw\44237-001\Drawings\cad dwgs - c.13\Structural\S-3.Dwg by jadeback Save date = 1/28/2010 3:13 PM

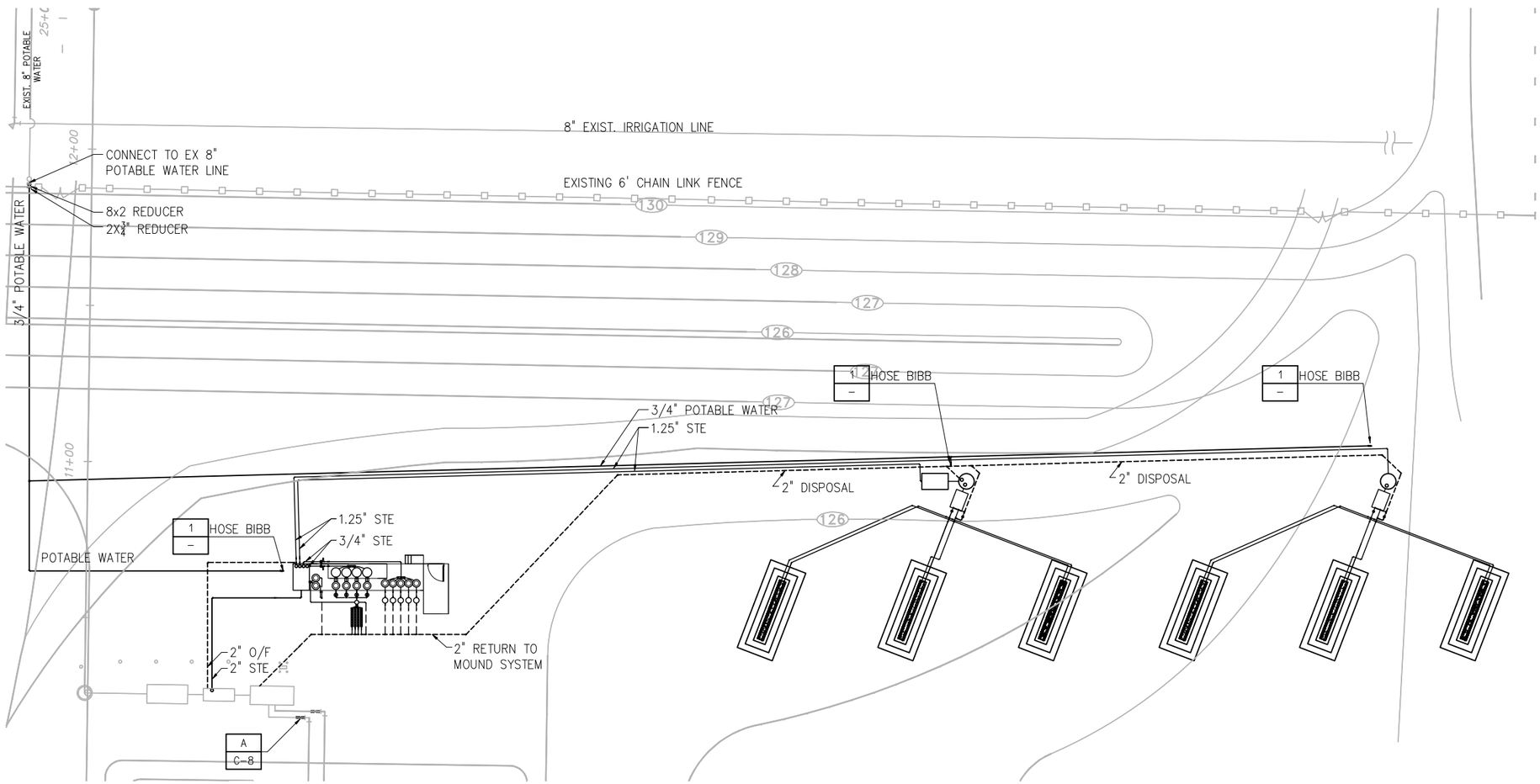

YARD PIPING PLAN

1"=20'

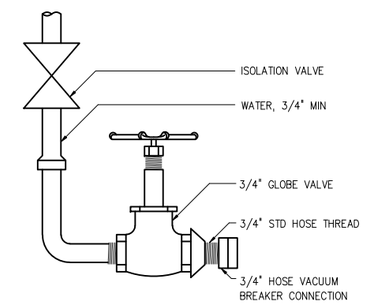

HOSE BIBB

DETAIL 1 / –

NTS

NOTES

1. ALL YARD PIPING, UNLESS OTHERWISE SHOWN SHALL BE SOLVENT WELDED PVC LAID AT EXISTING SITE GRADE AND COVERED WITH FILL MATERIAL.

   PVC PIPING SHALL BE LAID WHERE POSSIBLE IN COMMON TRENCHES AND MARKED WITH PIPE NUMBERS IN PERMANENT MARKINGS AT 10' INTERVALS.

2. MAINTAIN SLOPE AND GRADE OF GRAVITY LINES AS INDICATED ON THE DRAWINGS.

1"=20'-0" 20 10 0 20'

NO.	ISSUED FOR	DATE	BY
4	FINAL SUBMITTAL	01/10	–
3	100% SUBMITTAL	12/09	–
2	75% SUBMITTAL	12/09	–
1	50% SUBMITTAL	08/09	–

DESIGNED JME
DRAWN CMS
CHECKED DBS
PROJ. ENGR. JME
DLA
APPROVED

JOSEFIN M. EDEBACK
Name: Date:
Florida Professional Engineer's Registration Number: 69835

HAZEN AND SAWYER
Environmental Engineers & Scientists
10002 Princess Palm Avenue
Registry One Building, Suite 200
Tampa, Florida 33619
Certificate of Authorization Number: 2771

FLORIDA DEPARTMENT OF HEALTH
4052 BALD CYPRESS WAY, BIN A08
TALLAHASSEE, FL 32399-1713
(850)-245-4070

FLORIDA DEPARTMENT OF HEALTH
FLORIDA ONSITE SEWAGE NITROGEN REDUCTION STRATIGIES STUDY

YARD PIPING PLAN

THE SCALE BAR SHOWN BELOW MEASURES ONE INCH LONG ON THE ORIGINAL DRAWING.

DATE FEBRUARY 2010
H & S JOB NUMBER 44237-001
CONTRACT NUMBER
DRAWING NUMBER M-1

PLOT DATE: 3/4/2010 9:38 AM BY: JEDEBACK

File = Q:\44237-000-bpw\44237-001\Drawings\Final design - v13\Mechanical\M-1 YARD PIPING PLAN.Dwg Saved by jedeback. Save date = 3/3/2010 2:13 PM

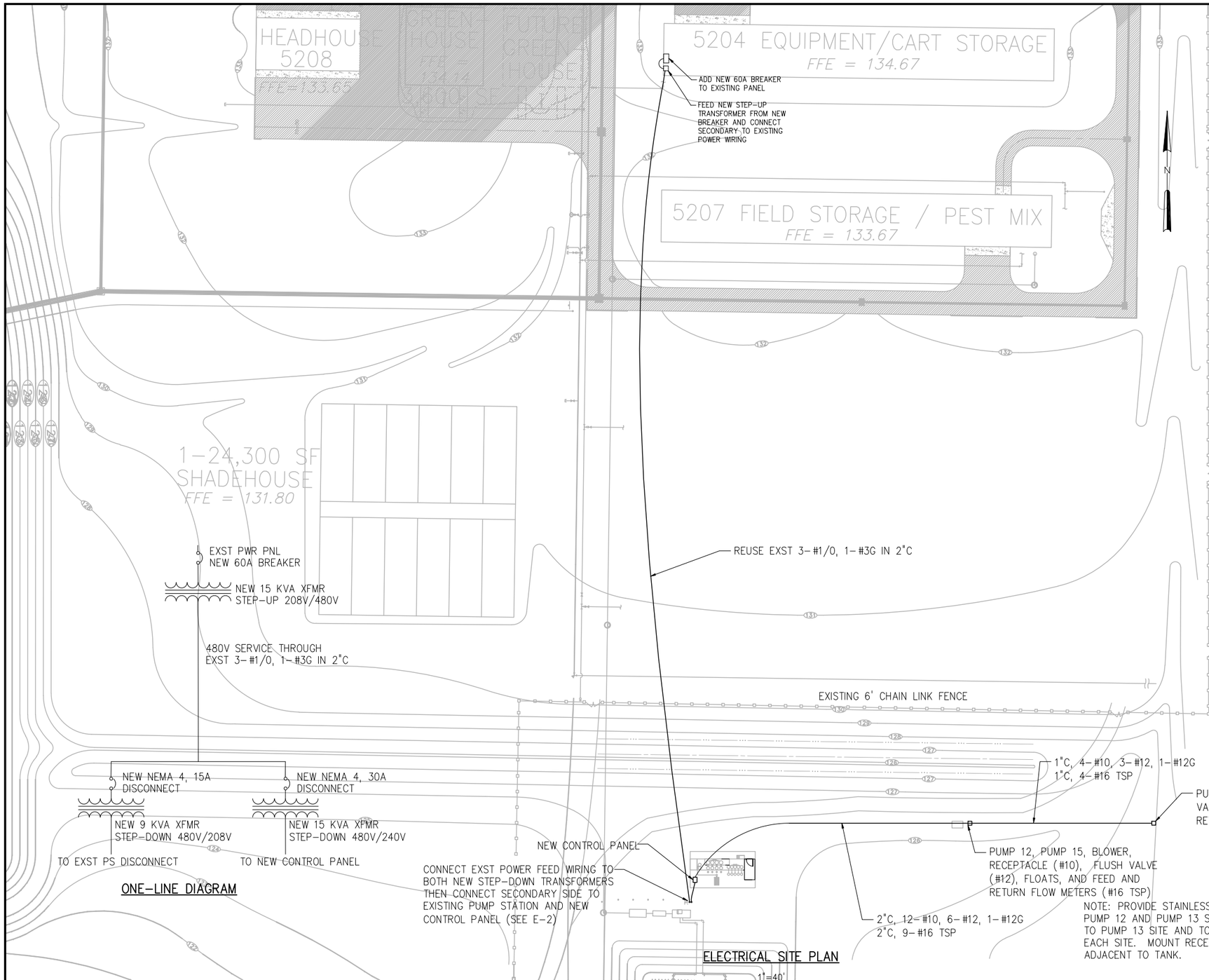

ONE-LINE DIAGRAM

ELECTRICAL SITE PLAN
1"=40'

ELECTRICAL NOTES

COORDINATE LOCATIONS OF ELECTRICAL EQUIPMENT, DEVICES, OUTLETS, FIXTURES, ETC. WITH CIVIL, STRUCTURAL, MECHANICAL, AND INSTRUMENTATION DRAWINGS PRIOR TO ROUGH-IN WORK. DO NOT SCALE ELECTRICAL

ALL WIRE SHALL BE COPPER.

PROVIDE INSULATED GROUNDING CONDUCTOR FROM EACH EQUIPMENT CONNECTION AND OUTLET TO GROUNDING BAR IN PANELBOARDS.

PROVIDE AN INSULATED GROUNDING CONDUCTOR IN ALL FEEDER AND BRANCH CIRCUITS.

CONTRACTOR SHALL PROVIDE ADDITIONAL JUNCTION BOXES, CONDUCTORS AND OTHER MATERIALS AND LABOR NECESSARY TO CONNECT PARALLEL FEEDER RUNS WHERE SUCH FEEDERS EXCEED CONNECTION CAPACITY OF CIRCUIT BREAKERS, PANELBOARDS AND OTHER CONNECTION POINTS.

RISER DIAGRAMS SHOW ONLY THE GENERAL CONFIGURATION OF THE SYSTEM. REFER TO THE APPROPRIATE DRAWINGS FOR EXACT DEVICE, QUANTITIES AND LOCATIONS.

ALL ELECTRICAL EQUIPMENT, DEVICES, ETC. LOCATED OUTDOORS SHALL BE WEATHERPROOF.

REFER TO STRUCTURAL DRAWINGS FOR CONCRETE WORK.

EXISTING UTILITIES AND OTHER UNDERGROUND OR CONCEALED ITEMS ARE SHOWN FOR REFERENCE ONLY. ADDITIONAL ITEMS NOT SHOWN MAY BE PRESENT AND LOCATIONS MAY DIFFER FROM THAT SHOWN. CONTRACTOR SHALL EXCAVATE AND CONDUCT DEMOLITION SO AS TO AVOID DAMAGE TO EXISTING ITEMS, SHALL NOTIFY OWNER AND ENGINEER AT ONCE OF ALL DAMAGE AND SHALL REPAIR DAMAGE TO ORIGINAL CONDITION TO THE SATISFACTION OF OWNER AND ENGINEER AT NO CHANGE IN CONTRACT AMOUNT.

ELECTRICAL SPECIFICATIONS

1. THE CONTRACTOR SHALL FURNISH ALL LABOR, MATERIALS AND EQUIPMENT NECESSARY FOR THE INSTALLATION OF A COMPLETE ELECTRICAL SYSTEM AS INDICATED WITHIN THESE DRAWINGS.
2. ALL WORK SHALL BE INSTALLED IN STRICT ACCORDANCE WITH ALL APPLICABLE CODES AND ORDINANCES AND WITH MANUFACTURERS RECOMMENDATIONS. ALL WORK, MATERIALS AND EQUIPMENT SHALL COMPLY WITH THE NATIONAL ELECTRICAL CODE 2002 EDITION.
3. ALL MATERIALS AND EQUIPMENT SHALL BE INSTALLED IN A NEAT, FIRST CLASS, WORKMANLIKE MANNER, TO THE APPROVAL OF THE ENGINEER AND GOVERNING AUTHORITIES.
4. GUARANTEES AND SERVICE: IN ADDITION TO THE MANUFACTURERS STANDARD GUARANTEES, THE CONTRACTOR SHALL GUARANTEE ALL MATERIALS, EQUIPMENT AND WORKMANSHIP AGAINST DEFECTS FOR ONE YEAR FROM THE DATE OF FINAL ACCEPTANCE, AND SHALL CORRECT ANY DEFECTS AT NO ADDITIONAL COST TO THE OWNER. ALL LAMPS SHALL BE GUARANTEED FOR 30 DAYS.
5. CONDUIT AND WIRING: THE CONTRACTOR SHALL PROVIDE COPPER CONDUCTORS IN METALLIC RACEWAY. CONDUITS SHALL CONTAIN AN INSULATED GREEN GROUND CONDUCTOR. FOLLOW RULES AND REGULATIONS OF THE NEC FOR PROPER INSTALLATION REGARDING INSTALLATION AND SUPPORT.

   CONDUIT SHALL BE INSTALLED AS NOTED. IF NOT SPECIFICALLY ADDRESSED THE FOLLOWING SHALL APPLY: (A) PROVIDE RIGID ALUMINUM IN EXPOSED LOCATIONS, (B) PROVIDE PVC (POLY VINYL CHLORIDE) UNDERGROUND. (C) PROVIDE LIQUID-TITE FLEXIBLE METALLIC CONDUIT FOR EQUIPMENT CONNECTIONS WHERE POSSIBILITY OF VIBRATION EXISTS. PROVIDE FITTINGS AS MANUFACTURED FOR CONDUIT USED.

   PROVIDE COPPER CONDUCTORS WITH DUAL RATED THWN-THHN TYPE INSULATION.

NO.	ISSUED FOR	DATE	BY
4	FINAL SUBMITTAL	01/10	–
3	100% SUBMITTAL	12/09	–
2	75% SUBMITTAL	12/09	–
1	50% SUBMITTAL	08/09	–

DESIGNED DBS
DRAWN CMS
CHECKED JB
PROJ. ENGR. DBS
DLA
APPROVED

DANIEL B. SCHMIDT
Name: Date:
Florida Professional Engineer's Registration Number: 40233

HAZEN AND SAWYER
Environmental Engineers & Scientists
10002 Princess Palm Avenue
Registry One Building, Suite 200
Tampa, Florida 33619
Certificate of Authorization Number: 2771

FLORIDA DEPARTMENT OF HEALTH
4052 BALD CYPRESS WAY, BIN A08
TALLAHASSEE, FL 32399-1713
(850)-245-4070

FLORIDA DEPARTMENT OF HEALTH
FLORIDA ONSITE SEWAGE NITROGEN REDUCTION STRATIGIES STUDY

ELECTRICAL SITE PLAN

THE SCALE BAR SHOWN BELOW MEASURES ONE INCH LONG ON THE ORIGINAL DRAWING.

DATE FEBRUARY 2010
H & S JOB NUMBER 44237-001
CONTRACT NUMBER
DRAWING NUMBER E-1

PLOT DATE: 3/4/2010 9:38 AM BY: JZEBACK
File = Q:\44237-000-Ipd\44237-001\Drawings\Final design - c-13\Electrical\E-1 ELECTRICAL SITE PLAN Saved by jzeback Save date = 1/28/2010 3:23 PM

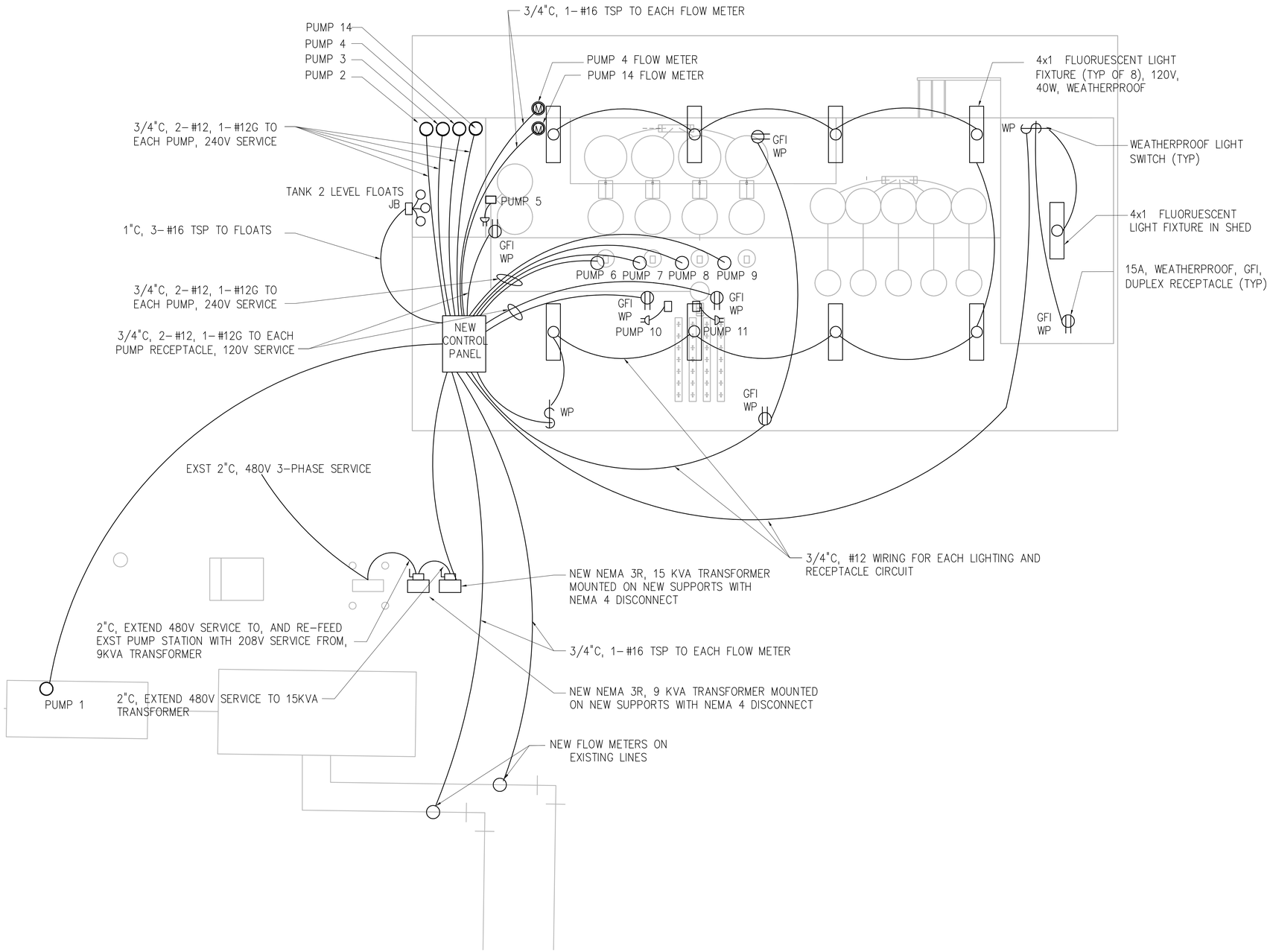

ELECTRICAL SITE PLAN

1/4"=1'-0"

CONTROL PANEL POWER DISTRIBUTION

Circuit Description	Breaker/ Fuse	A kVA	B kVA	C kVA
Receptacle and Lights	15	2.7	0.0	0.0
Control Panel Light	5	0.0	0.2	0.0
Pump 1	10	0.2	2.3	2.3
Pump 2	5	1.0	1.0	0.2
Pump 3	5	1.0	0.2	1.0
Pump 4	5	0.2	1.0	1.0
Pump 5	2	0.2	0.0	0.0
Pump 6	5	1.0	1.0	0.2
Pump 7	5	1.0	0.2	1.0
Pump 8	5	0.2	1.0	1.0
Pump 9	5	1.0	1.0	0.2
Pump 10	2	0.0	0.2	0.0
Pump 11	2	0.0	0.0	0.2
Receptacle at STE	15	0.0	2.1	0.0
Receptacle at NO3	15	0.0	0.0	2.1
Pump 12	10	2.3	2.3	0.2
Pump 13	10	2.3	0.2	2.3
Pump 14	5	0.2	1.0	1.0
Pump 15	5	1.0	0.2	1.0
STE Blower	2	0.1	0.0	0.0
STE Valve 1	2	0.0	0.1	0.0
STE Valve 2	2	0.0	0.0	0.1
PLC Power	5	0.0	0.0	0.8
Total Connected Load		14.7	14.2	14.9

NO.	ISSUED FOR	DATE	BY
4	FINAL SUBMITTAL	01/10	–
3	100% SUBMITTAL	12/09	–
2	75% SUBMITTAL	12/09	–
1	50% SUBMITTAL	08/09	–

DESIGNED DBS
DRAWN CMS
CHECKED JB
PROJ. ENGR. DBS
DLA
APPROVED

DANIEL B. SCHMIDT
Name: Date:
Florida Professional Engineer's Registration Number: 40233

HAZEN AND SAWYER
Environmental Engineers & Scientists
10002 Princess Palm Avenue
Registry One Building, Suite 200
Tampa, Florida 33619
Certificate of Authorization Number: 2771

FLORIDA DEPARTMENT OF HEALTH
4052 BALD CYPRESS WAY, BIN A08
TALLAHASSEE, FL 32399-1713
(850)-245-4070

FLORIDA DEPARTMENT OF HEALTH
FLORIDA ONSITE SEWAGE NITROGEN REDUCTION STRATIGIES STUDY

ELECTRICAL SITE PLAN AND DETAILS

THE SCALE BAR SHOWN BELOW MEASURES ONE INCH LONG ON THE ORIGINAL DRAWING.

DATE FEBRUARY 2010
H & S JOB NUMBER 44237-001
CONTRACT NUMBER
DRAWING NUMBER E-2

PLOT DATE: 3/4/2010 10:33 AM BY: JEDEBACK

File = O:\44237-000-tpa\44237-001\Drawings\final design - c.13\Electrical\E-2 ELECTRICAL SITE PLAN AND DETAILS Saved by jedeback Save date = 3/4/2010 10:31 AM

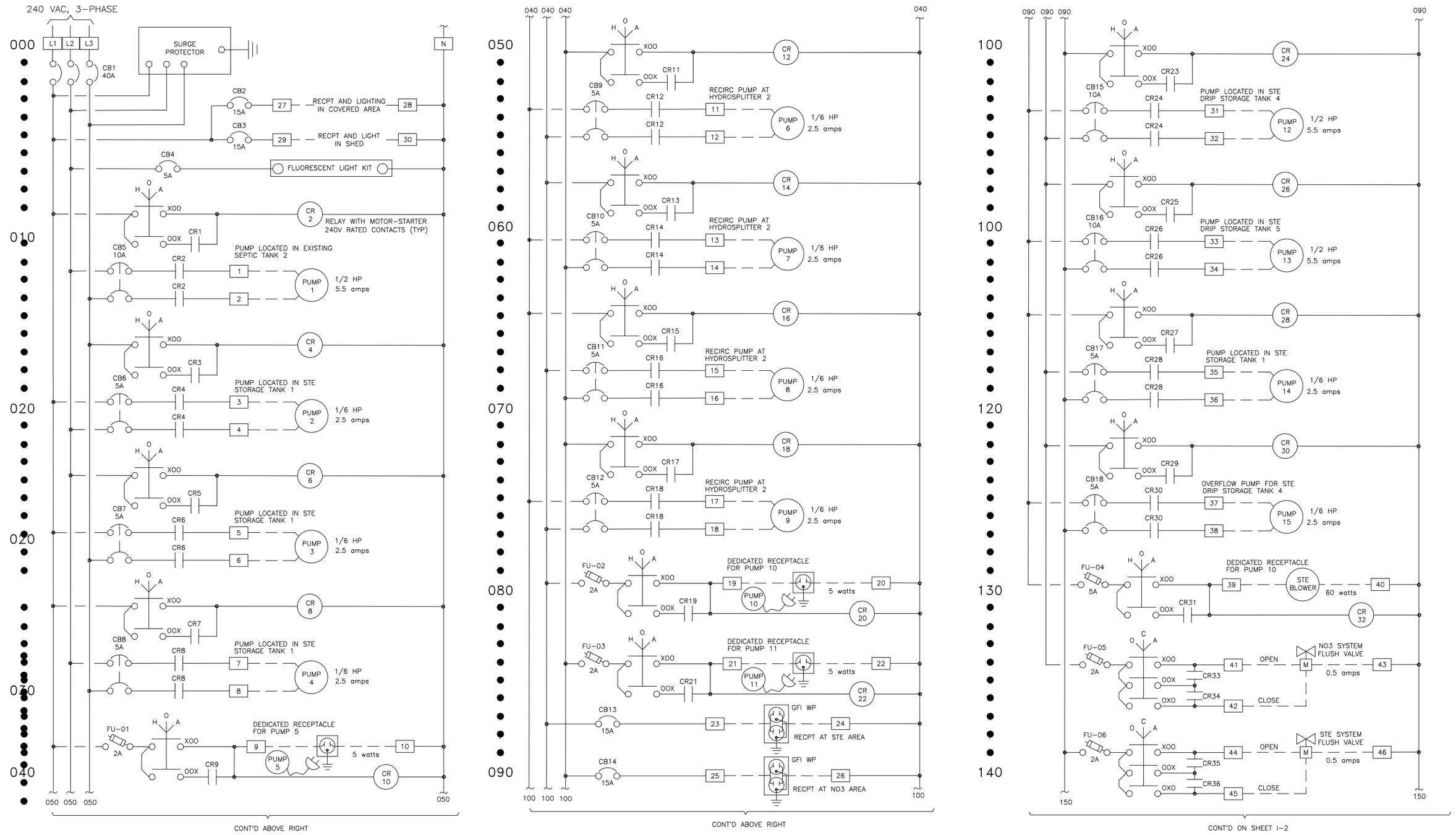

NO.	ISSUED FOR	DATE	BY
4	FINAL SUBMITTAL	01/10	–
3	100% SUBMITTAL	12/09	–
2	75% SUBMITTAL	12/09	–
1	50% SUBMITTAL	08/09	–

DESIGNED DBS
DRAWN CMS
CHECKED JB
PROJ. ENGR. DBS
DLA
APPROVED

DANIEL B. SCHMIDT
Name: Date:
Florida Professional Engineer's Registration Number: 40233

HAZEN AND SAWYER
Environmental Engineers & Scientists
10002 Princess Palm Avenue
Registry One Building, Suite 200
Tampa, Florida 33619
Certificate of Authorization Number: 2771

FLORIDA DEPARTMENT OF HEALTH
4052 BALD CYPRESS WAY, BIN A08
TALLAHASSEE, FL 32399-1713
(850)-245-4070

FLORIDA DEPARTMENT OF HEALTH
FLORIDA ONSITE SEWAGE NITROGEN REDUCTION STRATIGIES STUDY

PANEL POWER

THE SCALE BAR SHOWN BELOW MEASURES ONE INCH LONG ON THE ORIGINAL DRAWING.

DATE FEBRUARY 2010
H & S JOB NUMBER 44237-001
CONTRACT NUMBER
DRAWING NUMBER I-1

PLOT DATE: 3/4/2010 9:39 AM BY: JEDEBACK

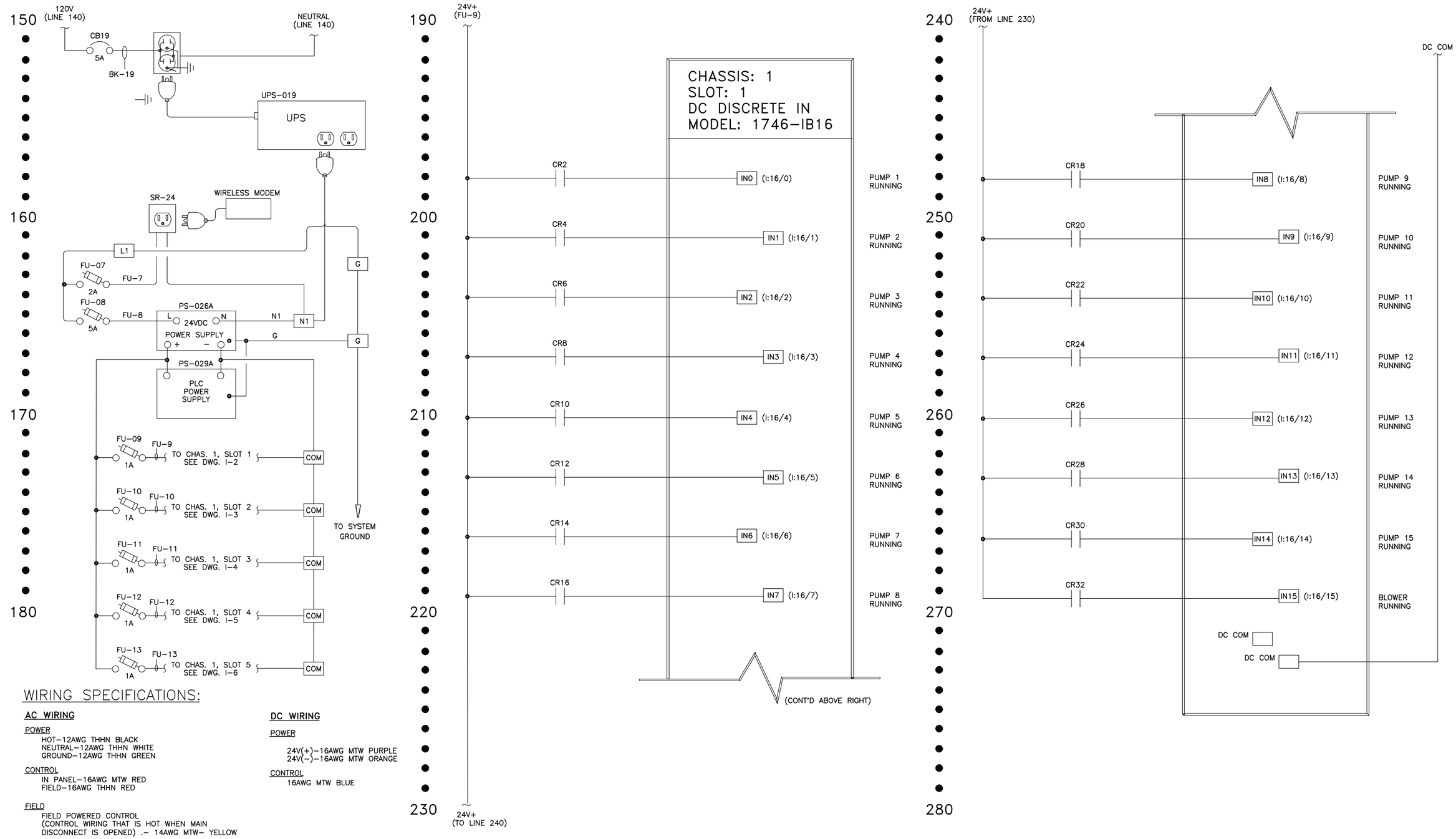

WIRING SPECIFICATIONS:

AC WIRING

POWER
HOT–12AWG THHN BLACK
NEUTRAL–12AWG THHN WHITE
GROUND–12AWG THHN GREEN

CONTROL
IN PANEL–16AWG MTW RED
FIELD–16AWG THHN RED

FIELD
FIELD POWERED CONTROL
(CONTROL WIRING THAT IS HOT WHEN MAIN DISCONNECT IS OPENED) .– 14AWG MTW– YELLOW

SIGNAL
IN PANEL–16AWG. TWISTED PAIR (BLUE/GRAY)
FIELD–16AWG. TWISTED SHIELDED PAIR (BLACK/CLEAR)

DC WIRING

POWER
24V(+)–16AWG MTW PURPLE
24V(–)–16AWG MTW ORANGE

CONTROL
16AWG MTW BLUE

NO.	ISSUED FOR	DATE	BY
4	FINAL SUBMITTAL	01/10	–
3	100% SUBMITTAL	12/09	–
2	75% SUBMITTAL	12/09	–
1	50% SUBMITTAL	08/09	–

DESIGNED DBS
DRAWN CMS
CHECKED JB
PROJ. ENGR. DBS
DLA
APPROVED

DANIEL B. SCHMIDT
Name: Date:
Florida Professional Engineer's Registration Number: 40233

HAZEN AND SAWYER
Environmental Engineers & Scientists
10002 Princess Palm Avenue
Registry One Building, Suite 200
Tampa, Florida 33619
Certificate of Authorization Number: 2771

FLORIDA DEPARTMENT OF HEALTH
4052 BALD CYPRESS WAY, BIN A08
TALLAHASSEE, FL 32399-1713
(850)-245-4070

FLORIDA DEPARTMENT OF HEALTH
FLORIDA ONSITE SEWAGE NITROGEN REDUCTION STRATIGIES STUDY

DI MODULE 1

THE SCALE BAR SHOWN BELOW MEASURES ONE INCH LONG ON THE ORIGINAL DRAWING.

DATE FEBRUARY 2010
H & S JOB NUMBER 44237–001
CONTRACT NUMBER
DRAWING NUMBER I–2

PLOT DATE: 3/4/2010 9:39 AM BY: JEDEBACK

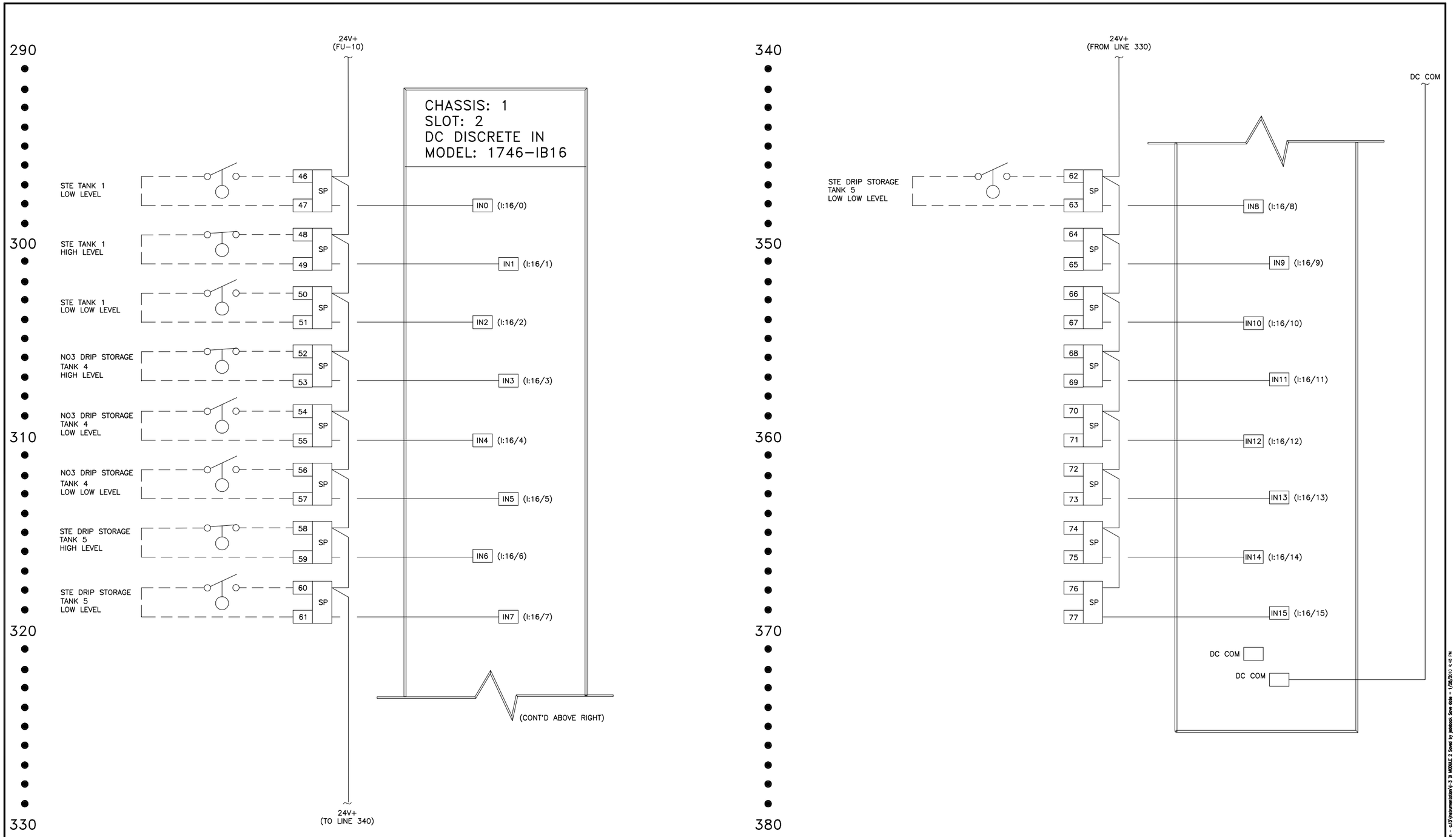

NO.	ISSUED FOR	DATE	BY
4	FINAL SUBMITTAL	01/10	–
3	100% SUBMITTAL	12/09	–
2	75% SUBMITTAL	12/09	–
1	50% SUBMITTAL	08/09	–

DESIGNED DBS
DRAWN CMS
CHECKED JB
PROJ. ENGR. DBS
APPROVED DLA

DANIEL B. SCHMIDT
Name: Date:
Florida Professional Engineer's Registration Number: 40233

HAZEN AND SAWYER
Environmental Engineers & Scientists
10002 Princess Palm Avenue
Registry One Building, Suite 200
Tampa, Florida 33619
Certificate of Authorization Number: 2771

FLORIDA DEPARTMENT OF HEALTH
4052 BALD CYPRESS WAY, BIN A08
TALLAHASSEE, FL 32399-1713
(850)-245-4070

FLORIDA DEPARTMENT OF HEALTH
FLORIDA ONSITE SEWAGE NITROGEN REDUCTION STRATIGIES STUDY

DI MODULE 2

THE SCALE BAR SHOWN BELOW MEASURES ONE INCH LONG ON THE ORIGINAL DRAWING.

DATE FEBRUARY 2010
H & S JOB NUMBER 44237-001
CONTRACT NUMBER
DRAWING NUMBER I-3

PLOT DATE: 3/4/2010 9:39 AM BY: JEBEACK
File = Q:\44237-000-tpk\44237-001\Drawings\Final design - c.ctb\Instrumentation\I-3 DI MODULE 2.Saved by jebeack. Save date = 1/28/2010 4:48 PM

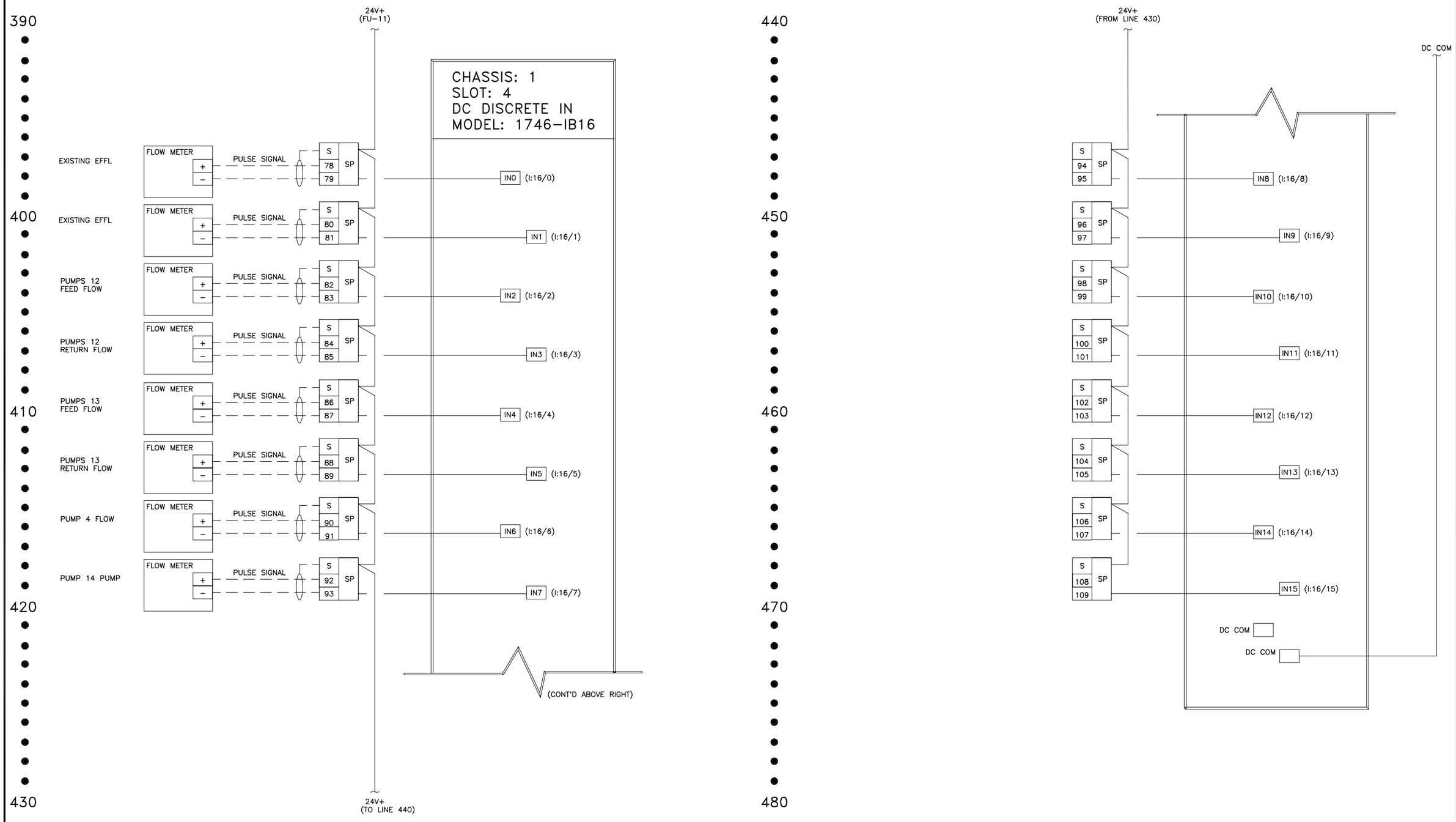

NO.	ISSUED FOR	DATE	BY
4	FINAL SUBMITTAL	01/10	–
3	100% SUBMITTAL	12/09	–
2	75% SUBMITTAL	12/09	–
1	50% SUBMITTAL	08/09	–

DESIGNED DBS
DRAWN CMS
CHECKED JB
PROJ. ENGR. DBS
DLA
APPROVED

DANIEL B. SCHMIDT
Name: Date:
Florida Professional Engineer's Registration Number: 40233

HAZEN AND SAWYER
Environmental Engineers & Scientists
10002 Princess Palm Avenue
Registry One Building, Suite 200
Tampa, Florida 33619
Certificate of Authorization Number: 2771

FLORIDA DEPARTMENT OF HEALTH
4052 BALD CYPRESS WAY, BIN A08
TALLAHASSEE, FL 32399-1713
(850)-245-4070

FLORIDA DEPARTMENT OF HEALTH
FLORIDA ONSITE SEWAGE NITROGEN REDUCTION STRATIGIES STUDY

DI MODULE 3

THE SCALE BAR SHOWN BELOW MEASURES ONE INCH LONG ON THE ORIGINAL DRAWING.

DATE FEBRUARY 2010
H & S JOB NUMBER 44237-001
CONTRACT NUMBER
DRAWING NUMBER I-4

PLOT DATE: 3/4/2010 9:39 AM BY: JEDEBACK

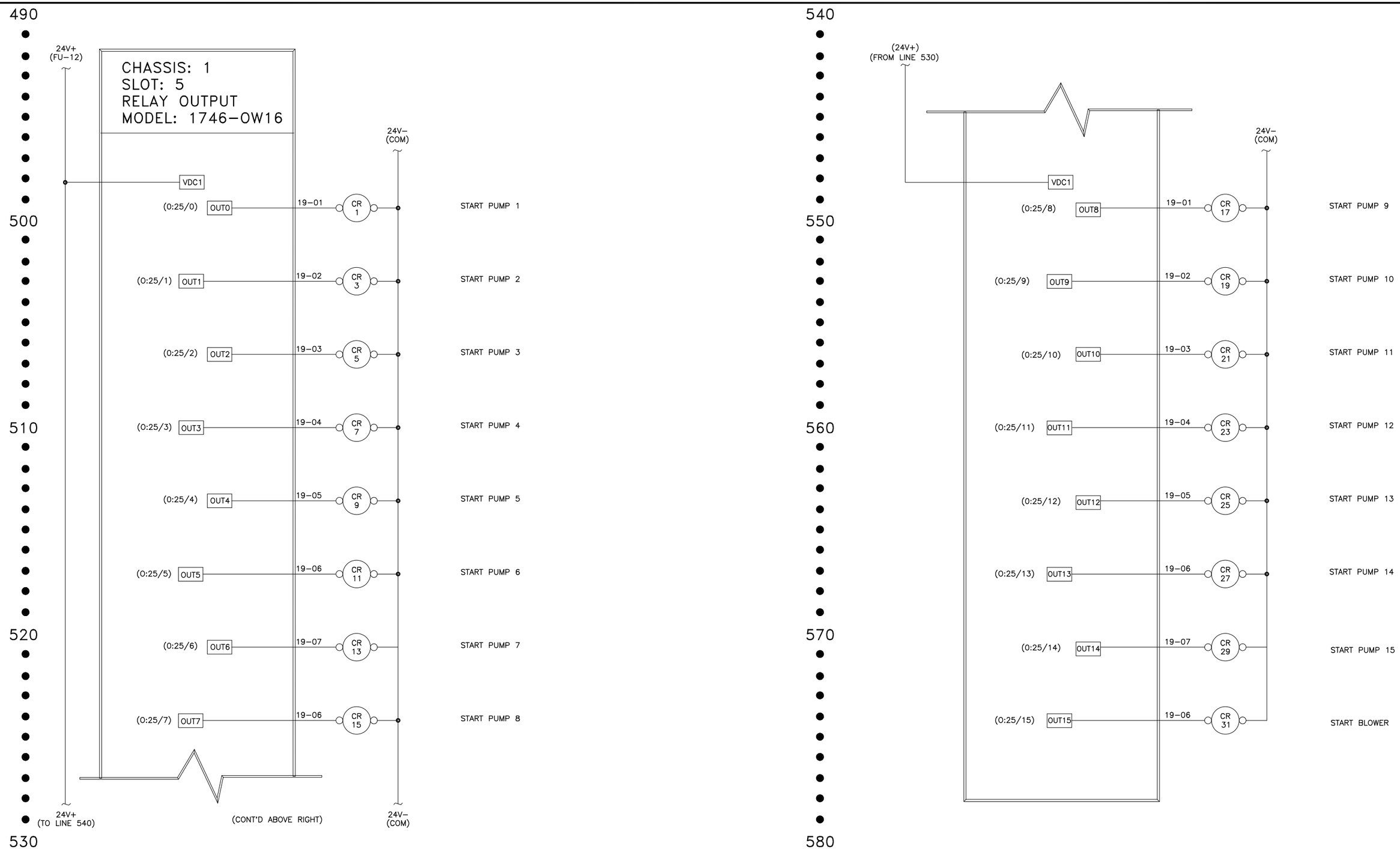

NO.	ISSUED FOR	DATE	BY
4	FINAL SUBMITTAL	01/10	–
3	100% SUBMITTAL	12/09	–
2	75% SUBMITTAL	12/09	–
1	50% SUBMITTAL	08/09	–

DESIGNED DBS
DRAWN CMS
CHECKED JB
PROJ. ENGR. DBS
DLA
APPROVED

DANIEL B. SCHMIDT
Name: Date:
Florida Professional Engineer's Registration Number: 40233

HAZEN AND SAWYER
Environmental Engineers & Scientists
10002 Princess Palm Avenue
Registry One Building, Suite 200
Tampa, Florida 33619
Certificate of Authorization Number: 2771

FLORIDA DEPARTMENT OF HEALTH
4052 BALD CYPRESS WAY, BIN A08
TALLAHASSEE, FL 32399-1713
(850)-245-4070

FLORIDA DEPARTMENT OF HEALTH
FLORIDA ONSITE SEWAGE NITROGEN REDUCTION STRATIGIES STUDY

DO MODULE 1

THE SCALE BAR SHOWN BELOW MEASURES ONE INCH LONG ON THE ORIGINAL DRAWING.

DATE FEBRUARY 2010
H & S JOB NUMBER 44237-001
CONTRACT NUMBER
DRAWING NUMBER I-5

PLOT DATE: 3/4/2010 9:39 AM BY: JEDEBACK

File = O:\44237-000-tps\44237-001\Drawings\final design - c13\instrumentation\I-5 DO MODULE 1 Saved by jedeback Save date = 1/29/2010 4:43 PM

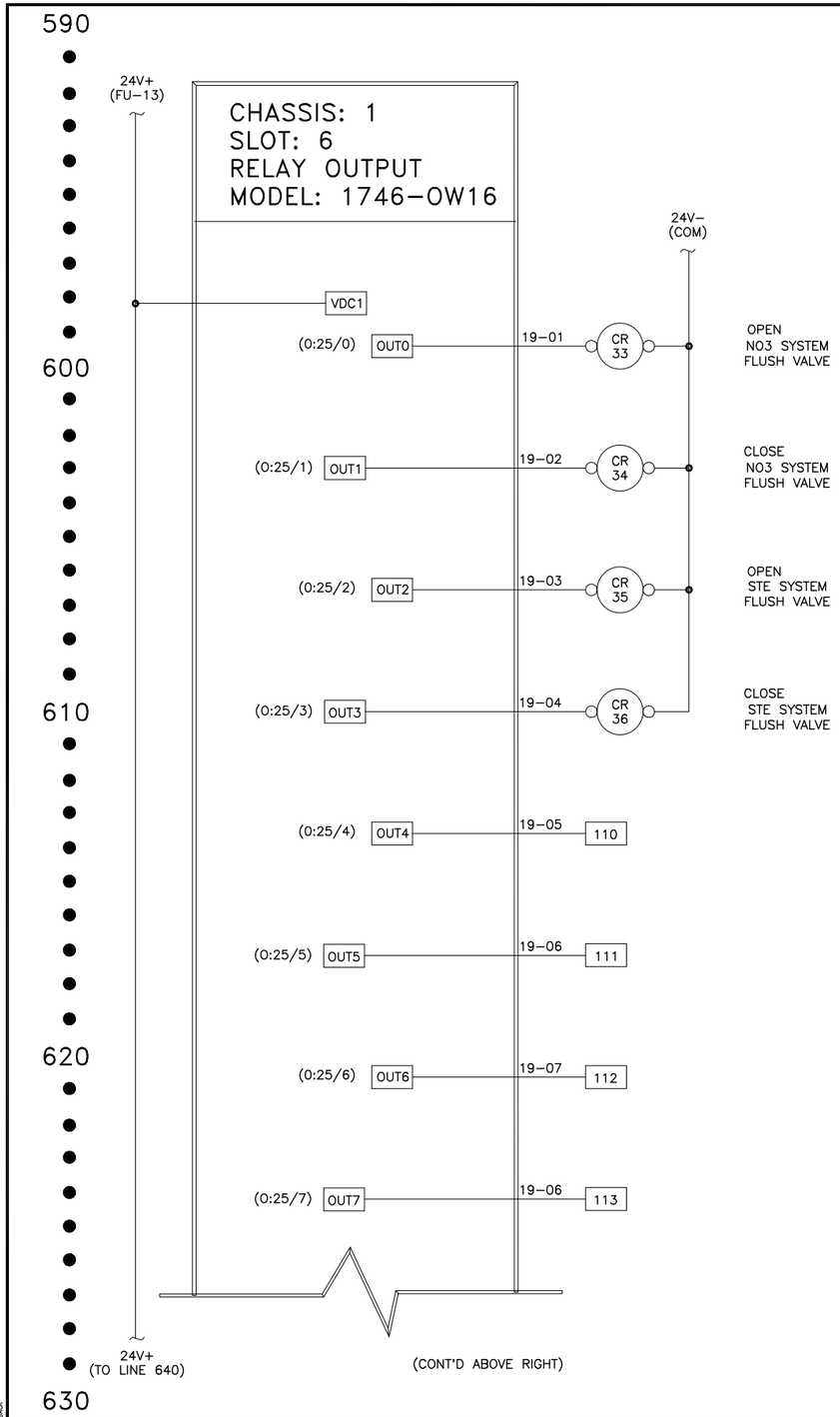

NO.	ISSUED FOR	DATE	BY
4	FINAL SUBMITTAL	01/10	–
3	100% SUBMITTAL	12/09	–
2	75% SUBMITTAL	12/09	–
1	50% SUBMITTAL	08/09	–

DESIGNED DBS
DRAWN CMS
CHECKED JB
PROJ. ENGR. DBS
DLA
APPROVED

DANIEL B. SCHMIDT
Name: Date:
Florida Professional Engineer's Registration Number: 40233

HAZEN AND SAWYER
Environmental Engineers & Scientists
10002 Princess Palm Avenue
Registry One Building, Suite 200
Tampa, Florida 33619
Certificate of Authorization Number: 2771

FLORIDA DEPARTMENT OF HEALTH
4052 BALD CYPRESS WAY, BIN A08
TALLAHASSEE, FL 32399-1713
(850)-245-4070

FLORIDA DEPARTMENT OF HEALTH
FLORIDA ONSITE SEWAGE NITROGEN REDUCTION STRATIGIES STUDY

DO MODULE 2

THE SCALE BAR SHOWN BELOW MEASURES ONE INCH LONG ON THE ORIGINAL DRAWING.

DATE FEBRUARY 2010
H & S JOB NUMBER 44237-001
CONTRACT NUMBER
DRAWING NUMBER I-6

PLOT DATE: 3/4/2010 9:40 AM BY: KZEBACK

File = G:\44237-000 tpk\44237-001\Drawings\Final design - c13\Welumenation\V-9 DO MODULE 2 Saved by pelcock Save date = 1/28/2010 4:51 PM

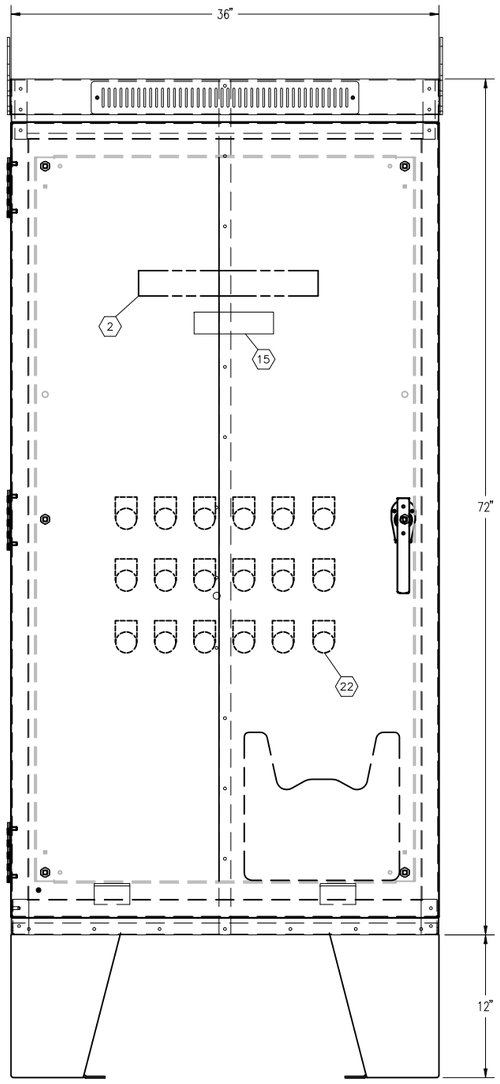

FRONT VIEW

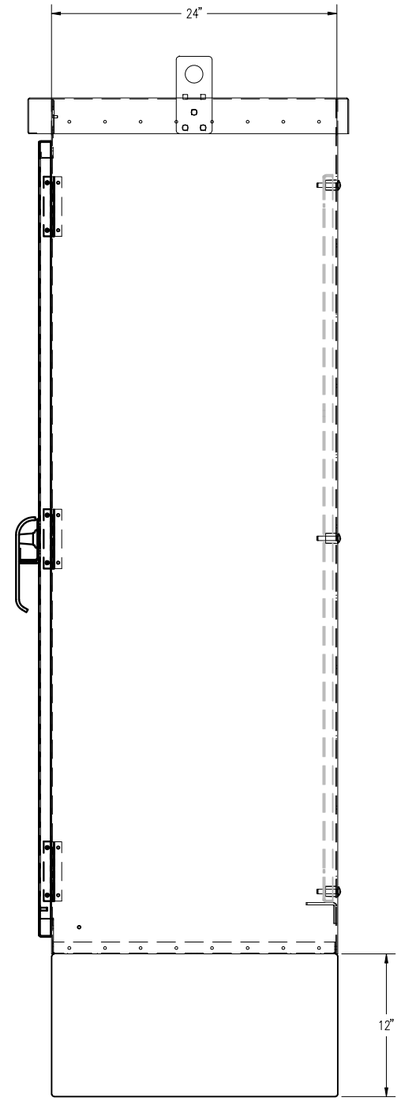

RIGHT SIDE VIEW

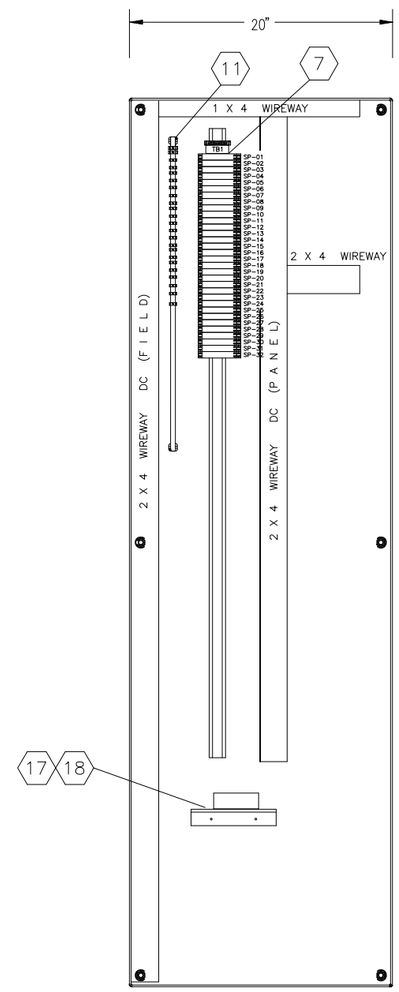

LEFT SUBPANEL

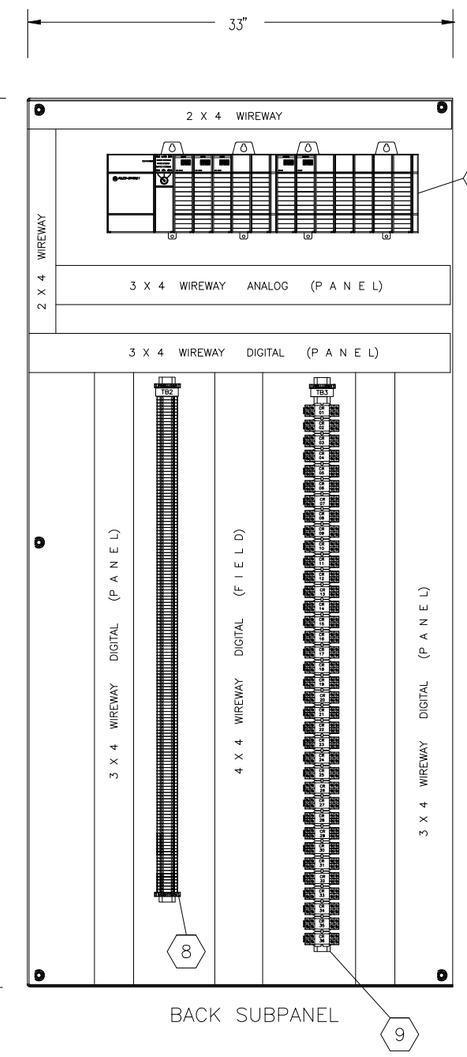

BACK SUBPANEL

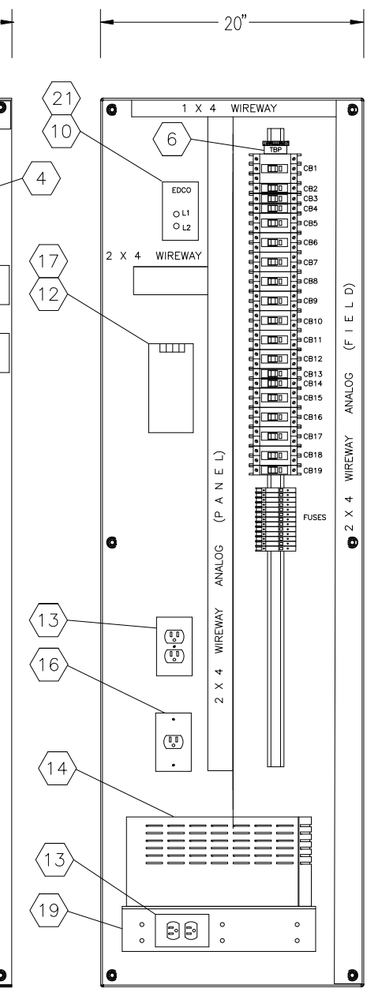

RIGHT SUBPANEL

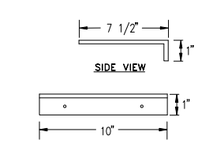

BLACK BOX CONVERTER SHELF

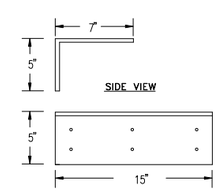

UPS SHELF

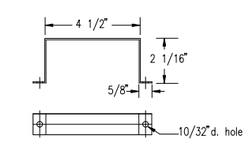

24VDC POWER SUPPLY MOUNTING BRACKET

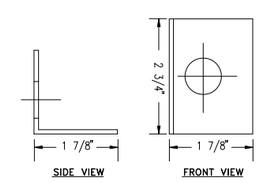

EDCO AC SURGE PROTECTOR MOUNTING BRACKET

NO.	ISSUED FOR	DATE	BY
4	FINAL SUBMITTAL	01/10	–
3	100% SUBMITTAL	12/09	–
2	75% SUBMITTAL	12/09	–
1	50% SUBMITTAL	08/09	–

DESIGNED DBS
DRAWN CMS
CHECKED JB
PROJ. ENGR. DBS
APPROVED DLA

DANIEL B. SCHMIDT
Name: Date:
Florida Professional Engineer's Registration Number: 40233

HAZEN AND SAWYER
Environmental Engineers & Scientists
10002 Princess Palm Avenue
Registry One Building, Suite 200
Tampa, Florida 33619
Certificate of Authorization Number: 2771

FLORIDA DEPARTMENT OF HEALTH
4052 BALD CYPRESS WAY, BIN A08
TALLAHASSEE, FL 32399-1713
(850)-245-4070

FLORIDA DEPARTMENT OF HEALTH
FLORIDA ONSITE SEWAGE NITROGEN REDUCTION STRATIGIES STUDY

PANEL ELEVATIONS

THE SCALE BAR SHOWN BELOW MEASURES ONE INCH LONG ON THE ORIGINAL DRAWING.

DATE FEBRUARY 2010
H & S JOB NUMBER 44237–001
CONTRACT NUMBER
DRAWING NUMBER I–7

PLOT DATE: 3/4/2010 9:40 AM BY: JZEBACK

File = Q:\44237-001-Ipd\44237-001\Drawings\Final design - c13\welcomeisland\I-7 Panel Elevations Saved by jzeback Save date = 1/28/2010 3:35 PM

BILL OF MATERIALS

ITEM	QTY	DESCRIPTION	MFR	PART NO.
1	1	ENCLOSURE, 74" X 36" X 24", NEMA 3R, STEEL	HOFFMAN	A-72R3624FSLP
	1	INNER PANEL, 68" X 33"	HOFFMAN	TBD
	2	INNER PANEL, 68" X 20"	HOFFMAN	TBD
	1	DEAD FRONT PANEL DOOR	HOFFMAN	TBD
	1	PRINT POCKET	HOFFMAN	TBD
	9	QUICK RELEASE LATCHES	HOFFMAN	TBD
	1	PAD LOCKABLE HASP	HOFFMAN	TBD
2	2	FLUORESCENT LIGHT KIT	HOFFMAN	X-LF116D18
3	A/R	WIREWAY (SIZED AS SHOWN)	PANDUIT	- - - - - -
4		PLC CONSISTING OF:		
	1	13 SLOT CHASSIS, SLC 500	ALLEN BRADLEY	1746-A13
	1	POWER SUPPLY, 24VDC	ALLEN BRADLEY	1746-P3
	1	SLC 5/05 PROCESSOR	ALLEN BRADLEY	1747-L552
	3	16-POINT DISCRETE INPUT MODULE	ALLEN BRADLEY	1746-IB16
	2	16-POINT DISCRETE OUTPUT MODULE	ALLEN BRADLEY	1746-OW16
	11	CARD SLOT FILLER	ALLEN BRADLEY	1746-N2
	1	COMMUNICATIONS CARD	ALLEN BRADLEY	TBD
5		NOT USED		
6		TBP CONSISTING OF (TAG "TBP"):		
	5	TERMINAL BLOCK	ALLEN BRADLEY	1492-W4
	3	GROUND TERMINAL BLOCK	ALLEN BRADLEY	1492-WG4
	2	FUSED TERMINAL BLOCK, W/BLOWN FUSE INDICATOR	ENTRELEC	111 043.15
	2	FUSE INDICATOR	ENTRELEC	167 075.25
	6	FUSE, 1 AMP (TAG "FU-XX")	LITTLEFUSE	313001
	6	FUSE, 2 AMP (TAG "FU-XX")	LITTLEFUSE	313002
	1	FUSE, 5 AMP (TAG "FU-XX")	LITTLEFUSE	313005
	1	JUMPER BAR	ENTRELEC	173 510.20
	1	END PLATE	ENTRELEC	118 503.27
	2	END CLAMP	ALLEN BRADLEY	1492-EA35
	1	PARTITION PLATE	ALLEN BRADLEY	1492-PP3
	1	CIRCUIT BREAKER, 40 AMP, 3-POLE (TAG "MAIN CB")	SQUARE-D	QOU-340
	12	CIRCUIT BREAKER, 10 AMP, 2-POLE (TAG "CB-X")	SQUARE-D	QOU-210
	2	CIRCUIT BREAKER, 15 AMP, SINGLE-POLE (TAG "CB-X")	SQUARE-D	QOU-115
	4	CIRCUIT BREAKER, 10 AMP, SINGLE-POLE (TAG "CB-X")	SQUARE-D	QUO-110
7	24	TB1 CONSISTING OF (TAG "TB1"): SIGNAL SURGE SUPPRESSER (TAG "SP-X")	EDCO	TBD
8		TB2 CONSISTING OF (TAG "TB2"):		
	145	TERMINAL BLOCK (NUMBERED BLOCKS)	ALLEN BRADLEY	1492-W4
	1	END PLATE	ALLEN BRADLEY	1492-EB3
	2	END CLAMP	ALLEN BRADLEY	1492-EA35
9		TB3 CONSISTING OF (TAG "TB3"):		
	2	END PLATE	ALLEN BRADLEY	1492-EB3
	4	END CLAMP	ALLEN BRADLEY	1492-EA35
	12	RELAY, MOTOR-STARTER RATED (TAG "CR-XX") *	IDEC	TBD *
	24	RELAY, 120VAC, 2PDT (TAG "CR-XX")	IDEC	RH2B-UAC120V
	36	RELAY SOCKET	IDEC	SH2B-05
10	1	POWER LINE PROTECTOR (TAG "PANEL SURGE PROTECTOR")	EDCO	EMC-240B
11		GROUND BUS CONSISTING OF:		
	1	BUS BAR	WEIDMULLER	34890
	30	SMALL TYPE CLAMP	WEIDMULLER	31650
	2	LARGE TYPE CLAMP	WEIDMULLER	31660
	2	END COVER	WEIDMULLER	29986
12	1	POWER SUPPLY, 24VDC, 10A (TAG "DC POWER SUPPLY")	MEAN WELL	S-240-24
13	2	GFCI DUPLEX RECEPTACLE W/FACE PLATE	PASS&SEYMOUR	1591
	2	SINGLE GANG BOX	STEEL CITY	5836 1 1/2
14	1	UNINTERRUPTIBLE POWER SUPPLY	LIEBERT	POWERSURE 700

BILL OF MATERIALS (CONT'D)

ITEM	QTY	DESCRIPTION	MFR	PART NO.
15	1	PANEL NAMEPLATE (SEE SCHEDULE TO RIGHT)	TDC	CUSTOM
16	1	SIMPLEX RECEPTACLE W/FACE PLATE	HUBBELL	5261
	1	SINGLE GANG BOX	STEEL CITY	5836 1 1/2
17	1	WIRELESS MODEM	TBD	TBD
18	1	MOUNTING BRACKET	–	CUSTOM
19	1	UPS SHELF	–	CUSTOM
20	1	24VDC POWER SUPPLY MTG. BRACKET	–	CUSTOM
21	1	EDCO AC SURGE PROTECTOR MTG. BRACKET	–	CUSTOM
22	1	3-POSITION SELECTOR SWITCHES (ON DEAD FRONT)	A/B	BULLETIN 800

* MOTOR-STARTER RATED RELAYS TO HAVE 120V COIL
240V CONTACTS FOR MOTOR, 120V CONTACTS FOR CONTROL

PANEL TAG SCHEDULE

FIRST LINE	SECOND LINE	TYPE	SIZE
PER BOM	PER BOM (IF NEEDED)	WHT W/BLK LETTERS	1/2" x 1" (MIN)

PANEL TAGS
MATERIAL : ADHESIVE BACK, LAMINATED PLASTIC.
LETTERS : 1/4-INCH MINIMUM, HELVETICA MEDIUM, UNLESS OTHERWISE NOTED.

PANEL NAMEPLATE

TYPE	BLK W/WHT LETTERS
SIZE	1" X 3"
1ST.LINE	FLORIDA ONSITE SEWAGE NITROGEN REDUCTION STRATEGIES PROJECT
2ND.LINE	CONTROL PANEL

PANEL NAMEPLATE
MATERIAL : ADHESIVE BACK, LAMINATED PLASTIC.
LETTERS : 1/2-INCH HELVETICA MEDIUM

NO.	ISSUED FOR	DATE	BY
4	FINAL SUBMITTAL	01/10	–
3	100% SUBMITTAL	12/09	–
2	75% SUBMITTAL	12/09	–
1	50% SUBMITTAL	08/09	–

DESIGNED DBS
DRAWN CMS
CHECKED JB
PROJ. ENGR. DBS
APPROVED DLA

DANIEL B. SCHMIDT
Name: Date:
Florida Professional Engineer's Registration Number: 40233

HAZEN AND SAWYER
Environmental Engineers & Scientists
10002 Princess Palm Avenue
Registry One Building, Suite 200
Tampa, Florida 33619
Certificate of Authorization Number: 2771

FLORIDA DEPARTMENT OF HEALTH
4052 BALD CYPRESS WAY, BIN A08
TALLAHASSEE, FL 32399-1713
(850)-245-4070

FLORIDA DEPARTMENT OF HEALTH
FLORIDA ONSITE SEWAGE NITROGEN REDUCTION STRATIGIES STUDY

BILL OF MATERIALS

THE SCALE BAR SHOWN BELOW MEASURES ONE INCH LONG ON THE ORIGINAL DRAWING.

DATE FEBRUARY 2010
H & S JOB NUMBER 44237-001
CONTRACT NUMBER
DRAWING NUMBER I-8

PLOT DATE: 3/4/2010 9:40 AM BY: JEDBACK
File = Q:\44237-00-Jax\44237-001\Drawings\Inst design - s13\Instrumentation\I-8 Bill of Materials Saved by jedback, Save date = 1/28/2010 3:38 PM

FUNCTIONAL CONTROL DESCRIPTIONS

1.01 THE REQUIREMENT

A. Furnish, test, install and place in satisfactory operation all PLC control strategies, operator interface programming, and related programming as noted herein.

B. The PLC programming and operator interface is to be fully tested at the manufacturer's shop prior to shipping. Once delivered, the programming is to be checked out prior to operation of the system and is to be demonstrated to the Engineer that the programs perform all functions as intended.

C. All control functions are to be performed by the PLC. The operator interface is to be used for manual override of equipment, adjustment of setpoints, and to download stored data from the PLC.

1.02 OPERATOR INTERFACE

A. The PLC shall communicate wirelessly with a laptop computer which shall function as the operator interface. The laptop computer shall be supplied with the PLC control panel and be set up to provide full access to the PLC for operator manual override of all equipment, ability to make adjustments to setpoints, download stored data from the PLC, and make modifications to the PLC program itself as needed.

B. The PLC shall include a data storage module capable of storing up to a month of data as described herein. The operator interface laptop will be used to download the data on a periodic basis. Data shall be transferable in MS Excel spreadsheet format.

C. The following displays shall be created and stored on the laptop for operator interface:

<u>Menu Bar</u> – menu bar across the top of each display to provide quick access to any display.

<u>Control Display</u> – Tabular display of all pumps, blower, and valves. For each device, provide an ON / OFF / AUTO button (OPEN / CLOSE / AUTO for valves) for point and click control of the equipment. For each device, provide a RED run indicator (open indicator for valves) that is grey when not running (or valve closed). For each pump and blower, provide the totalized runtime value calculated by the PLC (in hours and tenths of hours up to 999,999.9). For each pump with an associated flow meter, provide the totalized flow value calculated by the PLC. For each pump, blower, or valve on timer control, provide indication of time remaining until (or time HH:MM of) next start or, if running, time remaining until the equipment stops (or closes). For each pump whose normal sequence can be interrupted, provide indication of the override (low level shutoff or Pump "X" running interrupt).

<u>Setpoint Display</u> – Tabular display(s) for all control setpoints as described herein with simple point and click access to each setpoint that allows value changes by typing in a numeric value and pressing the ENTER key.

<u>Timer Setpoint Display</u> – For all timer setpoints, provide a 24–hour, bar graph format display to show the relative on and off times of each pump and blower.

1.03 PUMP 1 – EXISTING SEPTIC TANK 2 TO STE STORAGE TANK 1

A. Control Description: Pump shall start on LOW level in STE STORAGE TANK 1 and stop on HIGH level in STE STORAGE TANK 1. If PUMP 13 is running as part of its normal timed sequence, delay start of PUMP 1 until that sequence is complete.

B. Data Storage: Record totalized runtime, daily pump runtime, and number of starts per day.

1.04 PUMP 2 – STE STORAGE TANK 1 TO STE DRIP STORAGE TANK 5

A. Control Description: Pump shall start on LOW level in STE DRIP STORAGE TANK 5 and stop on HIGH level in STE DRIP STORAGE TANK 5. Pump shall stop on LOW LOW level in STE STORAGE TANK 1 and remain off until LOW level in STE STORAGE TANK 1 is reached. If PUMP 14 is running as part of its normal timed sequence, delay start of PUMP 2 until that sequence is complete.

B. Data Storage: Record totalized runtime, daily pump runtime, and number of starts per day.

1.05 PUMP 3 – STE STORAGE TANK 1 TO NITRIFICATION UNIT

A. Control Description: Pump shall start up to 8 times a day and run for a set amount of time. Provide 8 individual start times based on a 24–hour clock format (HH:MM). Provide 1 global cycle duration timer for all 8 start times. The 8 start times and the 1 cycle duration time setpoint shall be adjustable from the operator interface. Pump shall stop on LOW LOW level in STE STORAGE TANK 1 and remain off until LOW level in STE STORAGE TANK 1 is reached.

B. Data Storage: Record totalized runtime and daily pump runtime.

1.06 PUMP 4 – STE STORAGE TANK 1 TO HYDROSPLITTER SYSTEM 1

A. Control Description: Pump shall start a set number of times a day (up to 24 times) and run for a set amount of time. The number of start times a day and the cycle duration time setpoint shall be adjustable from the operator interface. The PLC shall divide the number of start times a day entered into 1,440 minutes (24 hours) to determine the start times of the pump starting from midnight. For example, if 18 times a day were selected, the pumps would start every 80 minutes (00:00, 01:20, 02:40 .... 21:20, 22:40). For uneven values, the PLC shall round to the nearest minute. Pump shall stop on LOW LOW level in STE STORAGE TANK 1 and remain off until LOW level in STE STORAGE TANK 1 is reached.

B. Data Storage: Record totalized runtime and daily pump runtime. Receive pulse input from flow meter and record totalized daily volume pumped. One pulse equals one gallon.

1.07 PUMP 5 – STE STORAGE TANK 1 TO IN–SITU SYSTEM

A. Control Description: Pump shall start up to 6 times a day and run for a set amount of time. Provide 6 individual start times based on a 24–hour clock format (HH:MM). Provide 1 global cycle duration timer for all 6 start times. The 6 start times and the 1 cycle duration time setpoint shall be adjustable from the operator interface.

B. Data Storage: Record totalized runtime and daily pump runtime. Calculate totalized daily volumes pumped based on pump flow rate entered by operator (calculated from pump maximum capacity, frequency, and stroke length set at pump).

1.08 PUMPS 6 THROUGH 9 – HYDROSPLITTER SYSTEM 2 RECIRCULATION PUMPS

A. Control Description: Pumps shall start when PUMP 14 starts and each pump shall run for a set amount of time. Provide 1 global cycle duration timer for each individual pump. The cycle duration time setpoint shall be adjustable from the operator interface.

B. Data Storage: Record totalized runtime and daily pump runtimes.

1.09 PUMPS 10 AND 11 – DENITE FEED FROM TANK 3

A. Control Description: Each pump shall start a set number of times a day (up to 24 times) and run for a set amount of time. The number of start times a day and the cycle duration time setpoint shall be adjustable from the operator interface and each pump shall run off individual setpoints. The PLC shall divide the number of start times a day entered into 1,440 minutes (24 hours) to determine the start times of the pump starting from 15 minutes after midnight. For example, if 13 times a day were selected, the pumps would start every 110.77 minutes (00:15, 02:06, 03:57 .... 20:33, 22:24). For uneven values, the PLC shall round to the nearest minute as indicated in example.

B. Data Storage: Record totalized runtime and daily pump runtimes. Calculate totalized daily volumes pumped based on pump flow rate entered by operator (calculated from pump maximum capacity, frequency, and stroke length set at pump).

1.10 PUMP 12 – NO3 DRIP STORAGE TANK 4 TO NO3 DRIP SYSTEM

A. Control Description: Pump shall start up to 6 times a day and run for a set amount of time. Provide 6 individual start times based on a 24–hour clock format (HH:MM). Provide 1 global cycle duration timer for all 6 start times. The 6 start times and the 1 cycle duration time setpoint shall be adjustable from the operator interface. Pump shall stop on LOW LOW level in NO3 DRIP STORAGE TANK 4 and remain off until LOW level in NO3 DRIP STORAGE TANK 4 is reached. Pump shall also start with flush cycle (see VALVE 1 controls).

B. Data Storage: Record totalized runtime. Record separate daily runtimes for the timed sequence described above and for the flush sequence. Receive pulse inputs from the supply and return flow meters and record totalized daily volume pumped as supply only (subtract return flow from supply flow). One pulse equals one gallon.

1.11 PUMP 13 – STE DRIP STORAGE TANK 5 TO STE DRIP System

A. Control Description: Pump shall start up to 6 times a day and run for a set amount of time. Provide 6 individual start times based on a 24–hour clock format (HH:MM). Provide 1 global cycle duration timer for all 6 start times. The 6 start times and the 1 cycle duration time setpoint shall be adjustable from the operator interface. Pump shall stop on LOW LOW level in STE DRIP STORAGE TANK 5 and remain off until LOW level in STE DRIP STORAGE TANK 5 is reached. Pump shall also start with flush cycle (see VALVE 2 controls).

B. Data Storage: Record totalized runtime. Record separate daily runtimes for the timed sequence described above and for the flush sequence. Receive pulse inputs from the supply and return flow meters and record totalized daily volume pumped as supply only (subtract return flow from supply flow). One pulse equals one gallon.

1.12 PUMP 14 – STE STORAGE TANK 1 TO HYDROSPLITTER SYSTEM 2

A. Control Description: Pump shall start a set number of times a day (up to 24 times) and run for a set amount of time. The number of start times a day and the cycle duration time setpoint shall be adjustable from the operator interface. The PLC shall divide the number of start times a day entered into 1,440 minutes (24 hours) to determine the start times of the pump starting from 30 minutes after midnight. For example, if 16 times a day were selected, the pumps would start every 90 minutes (00:30, 02:00, 03:30 .... 21:30, 23:00). For uneven values, the PLC shall round to the nearest minute. Pump shall stop on LOW LOW level in STE STORAGE TANK 1 and remain off until LOW level in STE STORAGE TANK 1 is reached.

B. Data Storage: Record totalized runtime and daily pump runtime. Receive pulse input from flow meter and record totalized daily volume pumped. One pulse equals one gallon.

1.13 PUMP 15 – NO3 DRIP STORAGE TANK 4 TO GRAVITY SUMP

A. Control Description: Pump shall start on HIGH level in NO3 DRIP STORAGE TANK 4 and stop on LOW level in NO3 DRIP STORAGE TANK 4. If PUMPs 3 or 13 are running as part of their normal timed sequences, delay start of PUMP 15 until those sequences are complete.

B. Data Storage: Record totalized runtime, daily pump runtime, and number of starts per day.

1.14 BLOWER – NO3 SYSTEM

A. Control Description: Blower shall start based on a repeat cycle ON / OFF timer. Separate ON and OFF times, in minutes, shall be provided that are adjustable from the operator interface. If 0 minutes are entered for ON time, the blower shall never run. If 0 minutes are entered for OFF time, the blower shall run continuously.

B. Data Storage: Record totalized runtime.

1.15 VALVE 1 – NO3 DRIP SYSTEM FLUSH

A. Control Description: Once per day, as determined by a flush time setting (HH:MM), the valve shall open. Once the valve is confirmed open, Pump 12 shall start and run for a set amount of time. Once timed out, the pump shall stop first, then the valve shall be closed. If Pump 12 is already running as part of its normal timed sequence, start of the flush cycle shall be delayed until that sequence is complete and the pump has shut off. The flush start time and cycle duration setpoint shall be adjustable from the operator interface.

1.16 VALVE 2 – STE DRIP SYSTEM FLUSH

A. Control Description: Once per day, as determined by a flush time setting (HH:MM), the valve shall open. Once the valve is confirmed open, Pump 13 shall start and run for a set amount of time. Once timed out, the pump shall stop first, then the valve shall be closed. If Pump 13 is already running as part of its normal timed sequence, start of the flush cycle shall be delayed until that sequence is complete and the pump has shut off. The flush start time and cycle duration setpoint shall be adjustable from the operator interface.

1.17 POWER DISTRIBUTION CALCULATION

A. Control Description: Odd numbered pumps 1–15 and Valve 1 are powered from one pole of the main power feed to the panel. Even numbered pumps, the blower, and Valve 2 are powered from the other pole. Pumps 1, 12, and 13 draw 11 amps. Pumps 2, 3, 4, 6, 7, 8, 9, 14, and 15 draw 5 amps. Pumps 5, 10, and 11, the blower, and the two valves draw less than 1 amp. Logic described above for permissives and selected time settings should minimize the number of pumps running at one time. However, the PLC shall calculate the estimated amp draw (sum of the values listed above) for each pole for the equipment running at any time. If the estimated value exceeds 30 amps, the PLC shall delay start of any additional equipment until the amp draw decreases below 30 amps.

B. Data Storage: Record highest estimated daily amp draw.

1.18 TIME OF DAY RESET

A. Control Description: Provide means for operator to enter the hour and minute of the day and then reset the PLC clock to match this time. Display of actual PLC time is to be shown on the Control Display.

NO.	ISSUED FOR	DATE	BY
4	FINAL SUBMITTAL	01/10	–
3	100% SUBMITTAL	12/09	–
2	75% SUBMITTAL	12/09	–
1	50% SUBMITTAL	08/09	–

DESIGNED DBS
DRAWN CMS
CHECKED JB
PROJ. ENGR. DBS
DLA
APPROVED

DANIEL B. SCHMIDT
Name: Date:
Florida Professional Engineer's Registration Number: 40233

HAZEN AND SAWYER
Environmental Engineers & Scientists
10002 Princess Palm Avenue
Registry One Building, Suite 200
Tampa, Florida 33619
Certificate of Authorization Number: 2771

FLORIDA DEPARTMENT OF HEALTH
4052 BALD CYPRESS WAY, BIN A08
TALLAHASSEE, FL 32399-1713
(850)-245-4070

FLORIDA DEPARTMENT OF HEALTH
FLORIDA ONSITE SEWAGE NITROGEN REDUCTION STRATIGIES STUDY

FUNCTIONAL CONTROL DESCRIPTIONS

THE SCALE BAR SHOWN BELOW MEASURES ONE INCH LONG ON THE ORIGINAL DRAWING.

DATE FEBRUARY 2010
H & S JOB NUMBER 44237–001
CONTRACT NUMBER
DRAWING NUMBER I–9

PLOT DATE: 3/4/2010 9:40 AM BY: JEDEBACK

File = O:\44237-000-Ipo\44237-001\Drawings\final design – c.13\Instrumentation\I-9 FUNCTIONAL CONTROL DESCRIPTIONS Saved by jedeback Save date = 3/4/2010 9:32 AM

CONTROL DISPLAY

		Device Control			Status	Total Runtime	Totalized Flow (gal)	Time to Next Start	Cycle Interruption
PUMP 1	Septic Tank 2 to STE Storage Tank 1	ON	OFF	AUTO	RUNNING	005,480.0			No
PUMP 2	STE Storage Tank 1 to STE Drip Storage Tank 5	ON	OFF	AUTO	STOPPED	005,480.0			No
PUMP 3	STE Storage Tank 1 to NO3 Drip Storage Tank 4	ON	OFF	AUTO	STOPPED	000,340.0		06:00	No
PUMP 4	STE Storage Tank 1 to Hydrosplitter System 1	ON	OFF	AUTO	STOPPED	000,080.7	524,453	02:40	No
PUMP 5	STE Storage Tank 1 to In-Situ System	ON	OFF	AUTO	STOPPED	000,111.3	103,024	08:15	
PUMP 6	Hydrosplitter System 2 Recirculation	ON	OFF	AUTO	RUNNING	000,148.5		10.3 min	
PUMP 7	Hydrosplitter System 2 Recirculation	ON	OFF	AUTO	RUNNING	000,148.5		10.3 min	
PUMP 8	Hydrosplitter System 2 Recirculation	ON	OFF	AUTO	RUNNING	000,148.5		10.3 min	
PUMP 9	Hydrosplitter System 2 Recirculation	ON	OFF	AUTO	RUNNING	000,148.5		10.3 min	
PUMP 10	Feed from Denite Feed Tank 3	ON	OFF	AUTO	RUNNING	000,030.0	010,231	03:57	
PUMP 11	Feed from Denite Feed Tank 3	ON	OFF	AUTO	RUNNING	000,030.0	010,231	03:57	
PUMP 12	NO3 Drip Storage Tank 4 to NO3 Drip System	ON	OFF	AUTO	STOPPED	005,480.0	705,480	09:45	Low Level
PUMP 13	STE Drip Storage Tank 5 to STE Drip System	ON	OFF	AUTO	STOPPED	000,340.0	685,301	09:45	No
PUMP 14	STE Storage Tank 1 to STE Hydrosplitter System 2	ON	OFF	AUTO	RUNNING	000,080.7	705,480	10.3 min	No
PUMP 15	NO3 Drip Storage Tank 4 to Gravity Sump	ON	OFF	AUTO	STOPPED	000,111.3			No
BLOWER	NO3 System Air Supply Blower	ON	OFF	AUTO	RUNNING	102,533.6		24.5 min	
VALVE 1	NO3 Drip Storage Tank 4 Flush Valve	OPEN	CLOSE	AUTO	CLOSED			22:30	
VALVE 2	STE Drip Storage Tank 5 Flush Valve	OPEN	CLOSE	AUTO	CLOSED			23:000	
11:43	PLC TIME			Existing System Flows:	Meter 1	685,301	Meter 2	685,301	

TIMECHART

SETPOINT DISPLAY

		Start Times (HH:MM)	Cycle Time (min)
PUMP 3	STE Storage Tank 1 to NO3 Drip Storage Tank 4	06 : 00 08 : 00 09 : 00 12 : 00 17 : 00 18 : 00 19 : 00 22 : 00	15
PUMP 5	STE Storage Tank 1 to In-Situ System	06 : 30 08 : 30 09 : 30 17 : 30 18 : 30 19 : 30	15
PUMP 12	NO3 Drip Storage Tank 4 to NO3 Drip System	04 : 30 05 : 30 07 : 30 15 : 30 16 : 30 20 : 30	8
PUMP 13	STE Drip Storage Tank 5 to STE Drip System	04 : 15 05 : 15 07 : 15 15 : 15 16 : 15 20 : 15	8
VALVE 1	NO3 Drip Storage Tank 4 Flush Valve	22 : 30	15

		Number of Starts / Day	Cycle Time (min)
PUMP 4	STE Storage Tank 1 to Hydrosplitter System 1	24	10
PUMP 10	Feed from Denite Feed Tank 3	24	10
PUMP 11	Feed from Denite Feed Tank 3	24	10
PUMP 14	STE Storage Tank 1 to Hydrosplitter System 2	24	10

		On Time	Off Time
BLOWER	NO3 System Air Supply Blower	45	15

		Cycle Time (min)
Pump 6	Hydrosplitter System 2 Recirculation	12
Pump 7	Hydrosplitter System 2 Recirculation	12
Pump 8	Hydrosplitter System 2 Recirculation	12
Pump 9	Hydrosplitter System 2 Recirculation	12

		Start Time (HH:MM)	Cycle Time (min)
VALVE 2	STE Drip Storage Tank 5 Flush Valve	23 : 30	15

Pump 10 Feed Rate:	03	gph
Pump 11 Feed Rate:	03	gph

NO.	ISSUED FOR	DATE	BY
4	FINAL SUBMITTAL	01/10	–
3	100% SUBMITTAL	12/09	–
2	75% SUBMITTAL	12/09	–
1	50% SUBMITTAL	08/09	–

DESIGNED DBS
DRAWN CMS
CHECKED JB
PROJ. ENGR. DBS
DLA
APPROVED

DANIEL B. SCHMIDT
Name: Date:
Florida Professional Engineer's Registration Number: 40233

HAZEN AND SAWYER
Environmental Engineers & Scientists
10002 Princess Palm Avenue
Registry One Building, Suite 200
Tampa, Florida 33619
Certificate of Authorization Number: 2771

FLORIDA DEPARTMENT OF HEALTH
4052 BALD CYPRESS WAY, BIN A08
TALLAHASSEE, FL 32399-1713
(850)-245-4070

FLORIDA DEPARTMENT OF HEALTH
FLORIDA ONSITE SEWAGE NITROGEN REDUCTION STRATIGIES STUDY

FUNCTIONAL CONTROL DESCRIPTIONS

THE SCALE BAR SHOWN BELOW MEASURES ONE INCH LONG ON THE ORIGINAL DRAWING.

DATE FEBRUARY 2010
H & S JOB NUMBER 44237-001
CONTRACT NUMBER
DRAWING NUMBER I-10

PLOT DATE: 3/4/2010 9:40 AM BY: JEEBACK
File = Q:\44237-005-tpb\44237-001\Drawings\final design - v.13\Instrumentation\I-10 FUNCTIONAL CONTROL DESCRIPTIONS.Saved by jeeback. Save date = 1/28/2010 3:42 PM